BETRIEBSANLEITUNG
OPERATING INSTRUCTIONS
INSTRUCTIONS DE SERVICE
ISTRUZIONI D'USO
HANDLEIDING
INSTRUCCIONES PARA EL MANEJO
MANUAL DE INSTRUÇÕES
NAUDOJIMOSI INSTRUKCIJA
KASUTUSJUHEND
LIETOŠANAS INSTRUKCIJA
DRIFTSINSTRUKS
DRIFTSINSTRUKTIONER
DRIFTSVEJLEDNING
INSTRUKCJA OBSŁUGI

KEZELÉSI ÚTMUTATÓ
NÁVOD K OBSLUZE
NAVODILO ZA UPORABO
NÁVOD NA OBSLUHU
UPUTE ZA RAD
MANUAL DE OPERATII
TREORACHA OIBRIÚCHÁIN
ΟΔΗΓΙΕΣ ΧΡΗΣΗΣ
EL KITABI
ИНСТРУКЦИИ ЗА ЕКСПЛОАТАЦИЯ
ИНСТРУКЦИЯ ПО ЭКСПЛУАТАЦИИ
取扱説明書
사용설명서
使用说明书

BCP 150

MAKE IT BECKER.

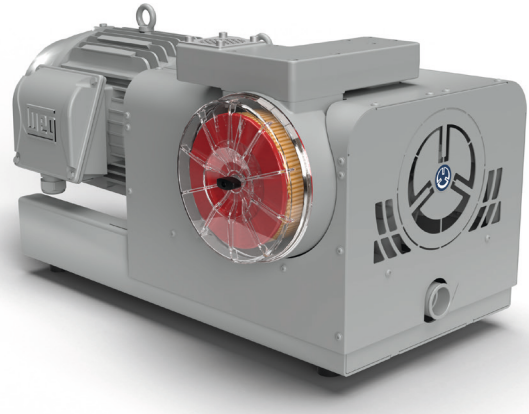

BECKER

Type 1
with integrated filter

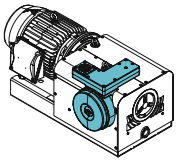

Type 2
without filter
for external filtration

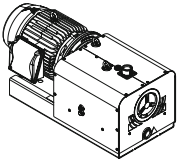

1

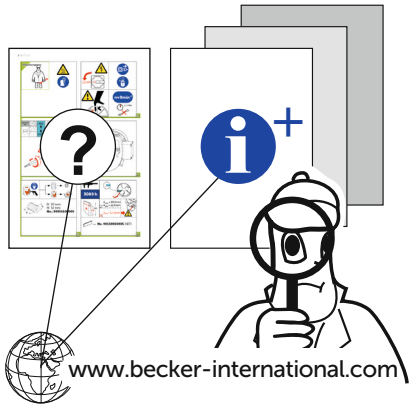

2

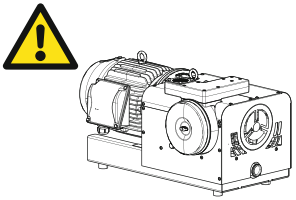













AIR

3

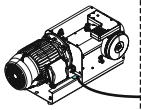

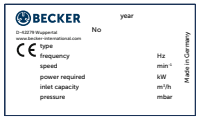

m³/h
mbar

DIN EN ISO 11203
Accuracy Class 2
K_{pA} = 3 dB(A)
⊢1m

L_{pA} = 77 dB(A) - 50Hz
L_{pA} = 78 dB(A) - 60Hz

4

> 0°C/32°F
< 40°C/104°F

INLET AIR

> 0°C/32°F
< 40°C/104°F

Avoid condensation

max. 90%

≤1000m
>1000m

Please consult BECKER

A

A > 100mm
A > 4"

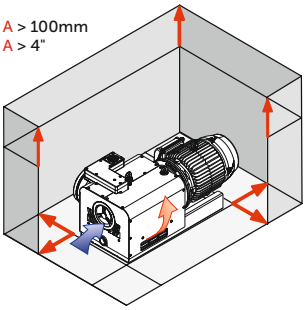

5



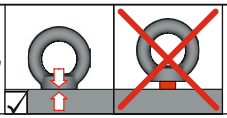

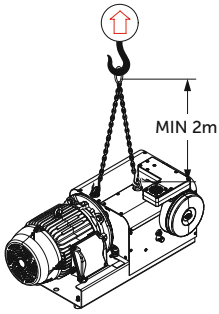

motor dependent

183-235 kg
402-517 lbs

6

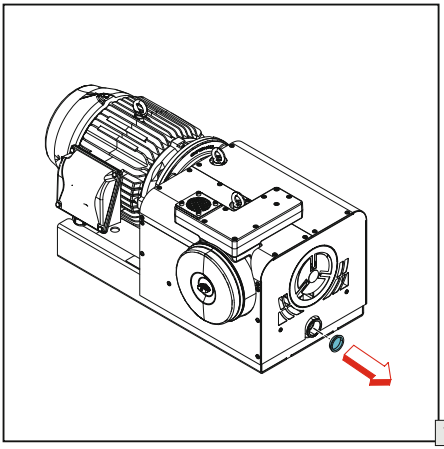
7

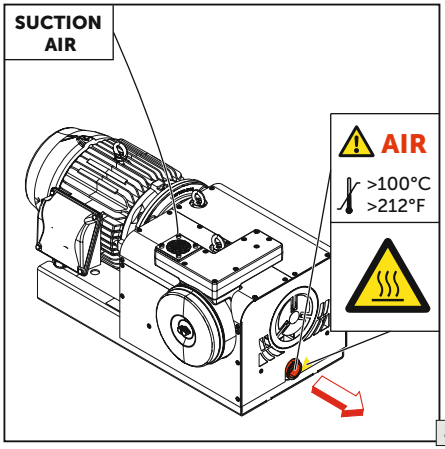
SUCTION
AIR
AIR
>100°C
>212°F
8

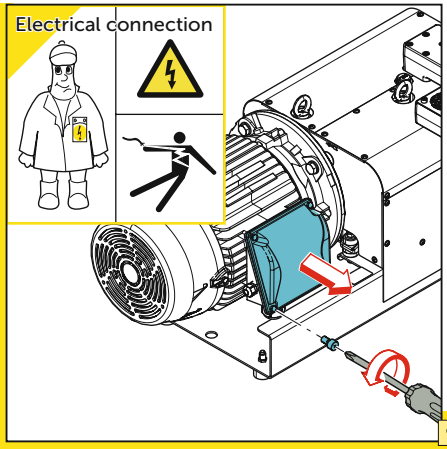
Electrical connection
9

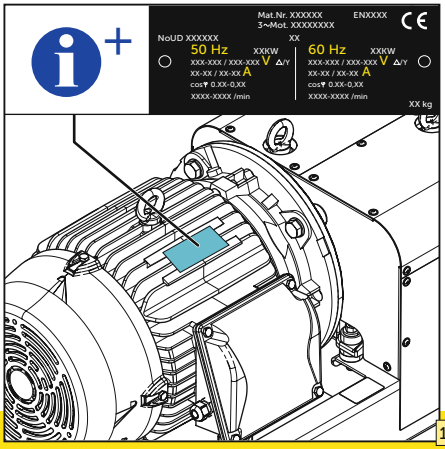
Mat.Nr. XXXXXX
EN XXXX
3~Mot. XXXXXXXX
NoUD XXXXXX
XX
50 Hz
XXkW
XXX-XXX / XXX-XXX V Δ/Y
XX-XX / XX-XX A
cosϕ 0.XX-0.XX
XXXX-XXXX /min
60 Hz
XXkW
XXX-XXX / XXX-XXX V Δ/Y
XX-XX / XX-XX A
cosϕ 0.XX-0.XX
XXXX-XXXX /min
XX kg
10

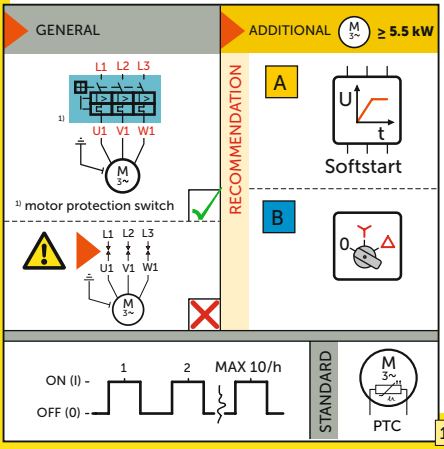
GENERAL
ADDITIONAL
≥ 5.5 kW
L1 L2 L3
U1 V1 W1
1) motor protection switch
RECOMMENDATION
A
Softstart
B
ON (I) -
OFF (0) -
1
2
MAX 10/h
STANDARD
PTC
11

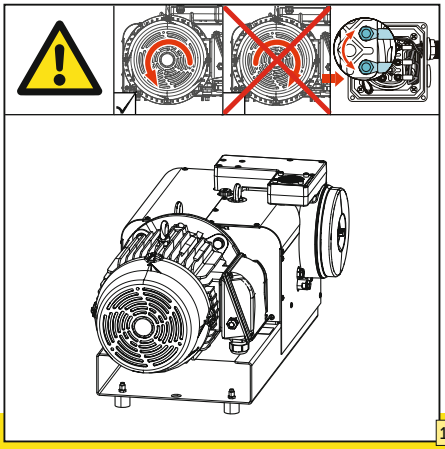
12

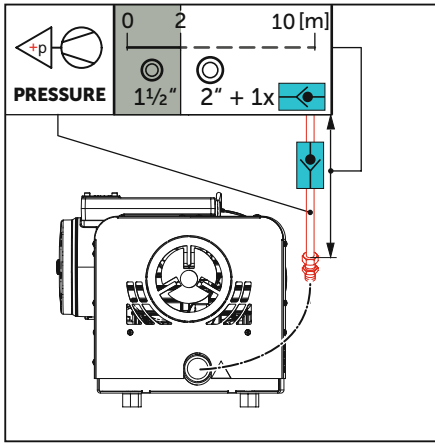
+p
PRESSURE
0
2
10 [m]
1½"
2" + 1x
13

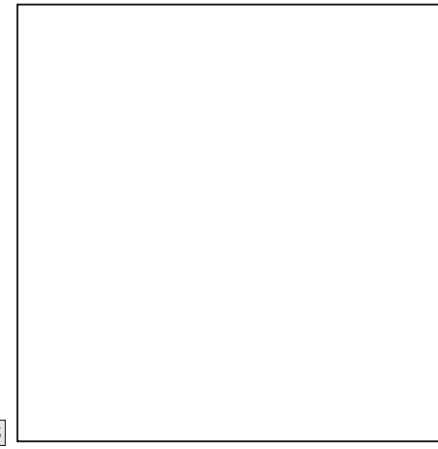

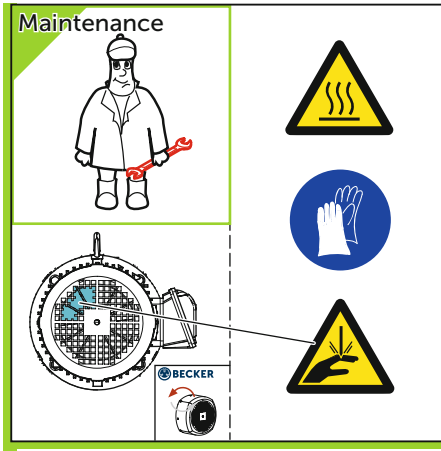
Maintenance
BECKER
14

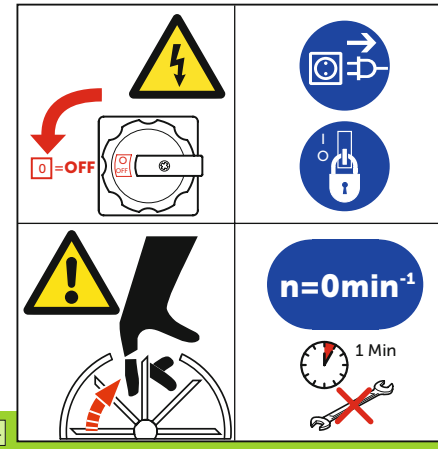
0 =OFF
n=0min-1
1 Min
15

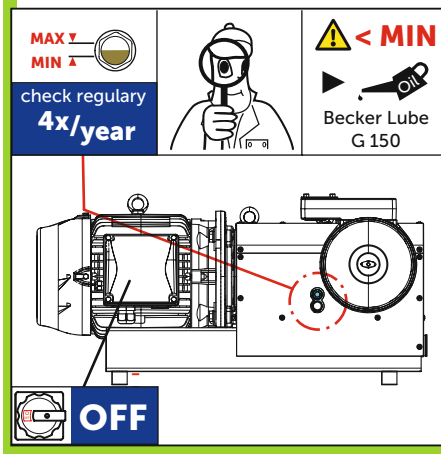
MAX
MIN
check regulary
4x/year
< MIN
Oil
Becker Lube
G 150
OFF
16

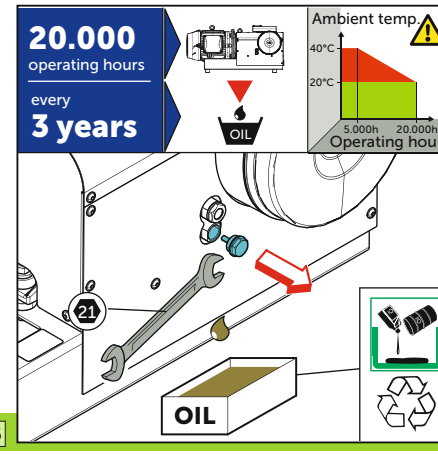
20.000
operating hours
every
3 years
OIL
Ambient temp.
40°C
20°C
5.000h
20.000h
Operating hours
21
OIL
17

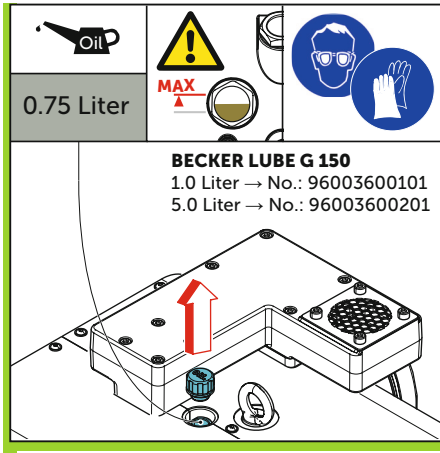

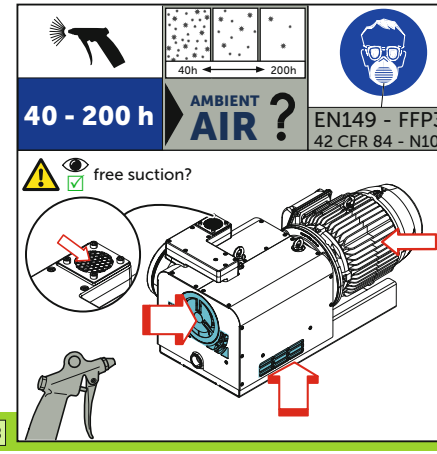

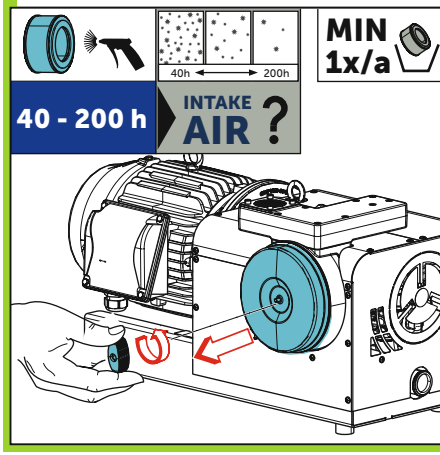



WWW.BECKER-INTERNATIONAL-SHOP.COM

Gebr. Becker GmbH
Hoelker Feld 29-31
42279 WUPPERTAL
GERMANY
info@becker-international.com
www.becker-international.com

BECKER

28100065260 | 2020-11-03| All rights reserved

MAKE IT BECKER.

BECKER