DATA SHEET

VTLF 2.250 ROTARY VANE VACUUM PUMPS

oil-free

air-cooled

MAKE IT BECKER.

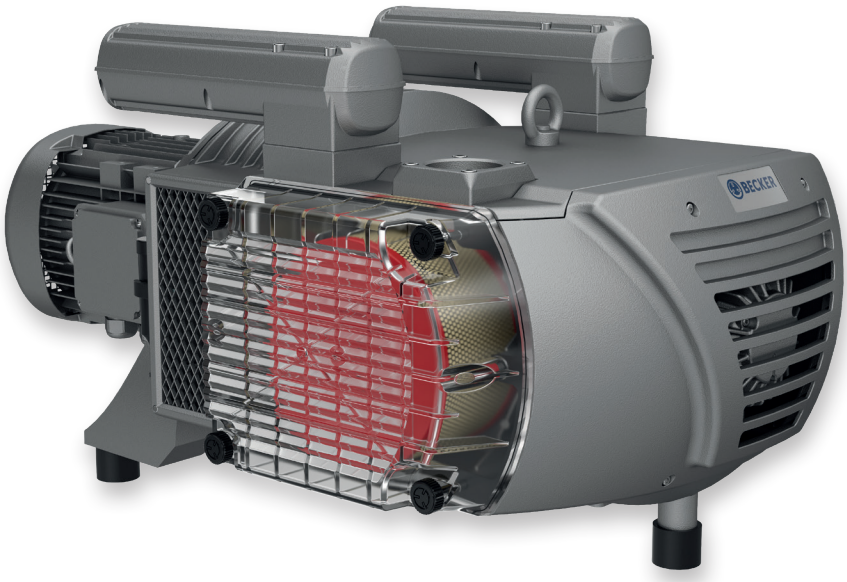

BECKER

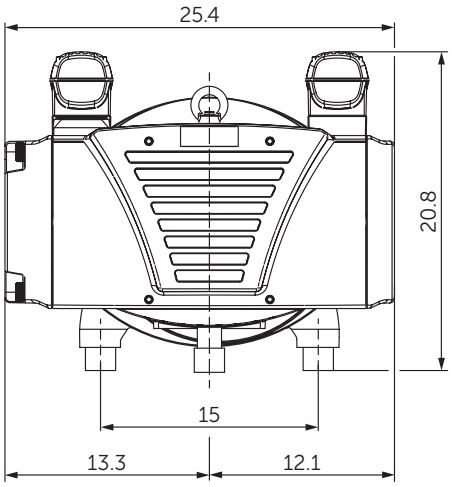

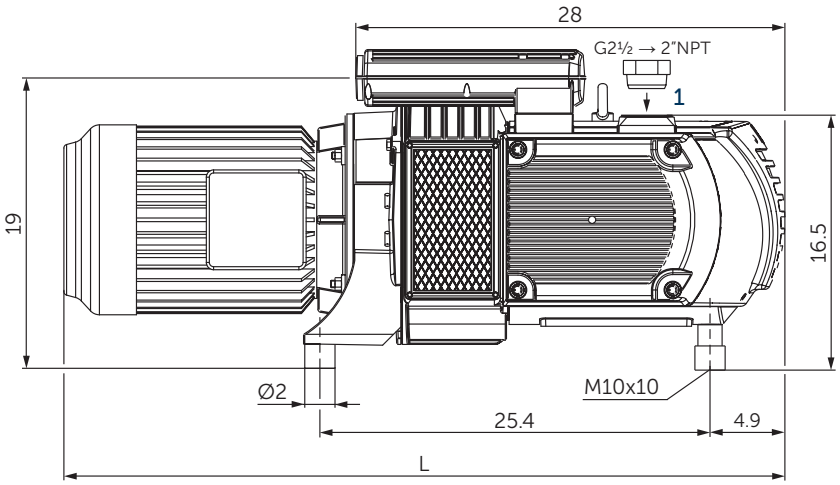

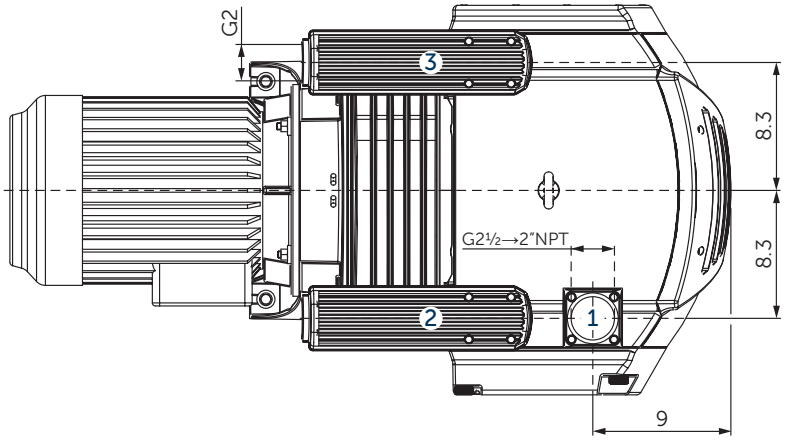

1 Vacuum connection, for the US market including adapter 2½" BSPP to 2" NPT thread
2 Vacuum relief valve with silencer
3 Blow-off valve with silencer
- Including integrated suction air filter
- The motor illustration may vary.
- Dimensions in inch

Suction air rate		Vacuum		Emission sound pressure level [1]		Weight without motor
CFM		in. HgV		dB(A)		lbs
50 Hz	60 Hz	50 Hz	60 Hz	50 Hz	60 Hz	
144	169	23.6	23.6	77	79	333

[1] According to DIN EN ISO 3744 (KpA = 3 dB(A)), 39.4 inch distance, at medium load, both connection sides piped

3~ Motors													L
#	50 Hz					60 Hz					Version	Weight	
	hp	V		rpm	A	hp	V		rpm	A		lbs	inch
01	7.4	Δ230/Y400	IE3	972	23.4/13.5	8.9	Δ265/Y460 Δ230/Y400	IE3	1170 1162	23.4/13.5 24.2/14.0	IP55 • ISO F • bimetal	224.9	46.5
02	7.4	Δ400/Y690	IE3	976	13.5/7.8	8.9	Δ460/Y795 Δ400/Y690	IE3	1173 1160	13.6/7.9 14.3/8.3	IP55 • ISO F • bimetal	235.9	46.5
03						8.9	YY230/Y460 YY208	IE3	1175 1159	27.8/13.9 28.1	UL(E235514) • CSA CC329B IP55 • ISO F • bimetal	235.9	46.5
04	7.4	Δ200/Y350	IE3	974	26.9/15.5	8.9	Δ220/Y380–400 Δ200/Y350	IE3	1168 1162	26.7/15.4–15.3 27.8/16.1	IP55 • ISO F • bimetal	235.9	46.5
05						8.9	Δ400/Y690	IE3	1175	15.2/8.8	UL(E235514) • CSA CC329B IP55 • ISO F • bimetal	235.9	46.5
06	10.0	380V	IE3	965	15.4	10.0	230/460 208		1175 1160	26.6/13.3 28.5	UL • CSA • CC029A NEMA • IP55 • ISO F	291.0	49.4
07						10.0	575		1175	10.6	UL • CSA • CC029A NEMA • IP55 • ISO F	280.0	49.4

- Type plate data on current consumption and rotation speed of the motors may vary. Tolerance -1.5/+2% in each case.

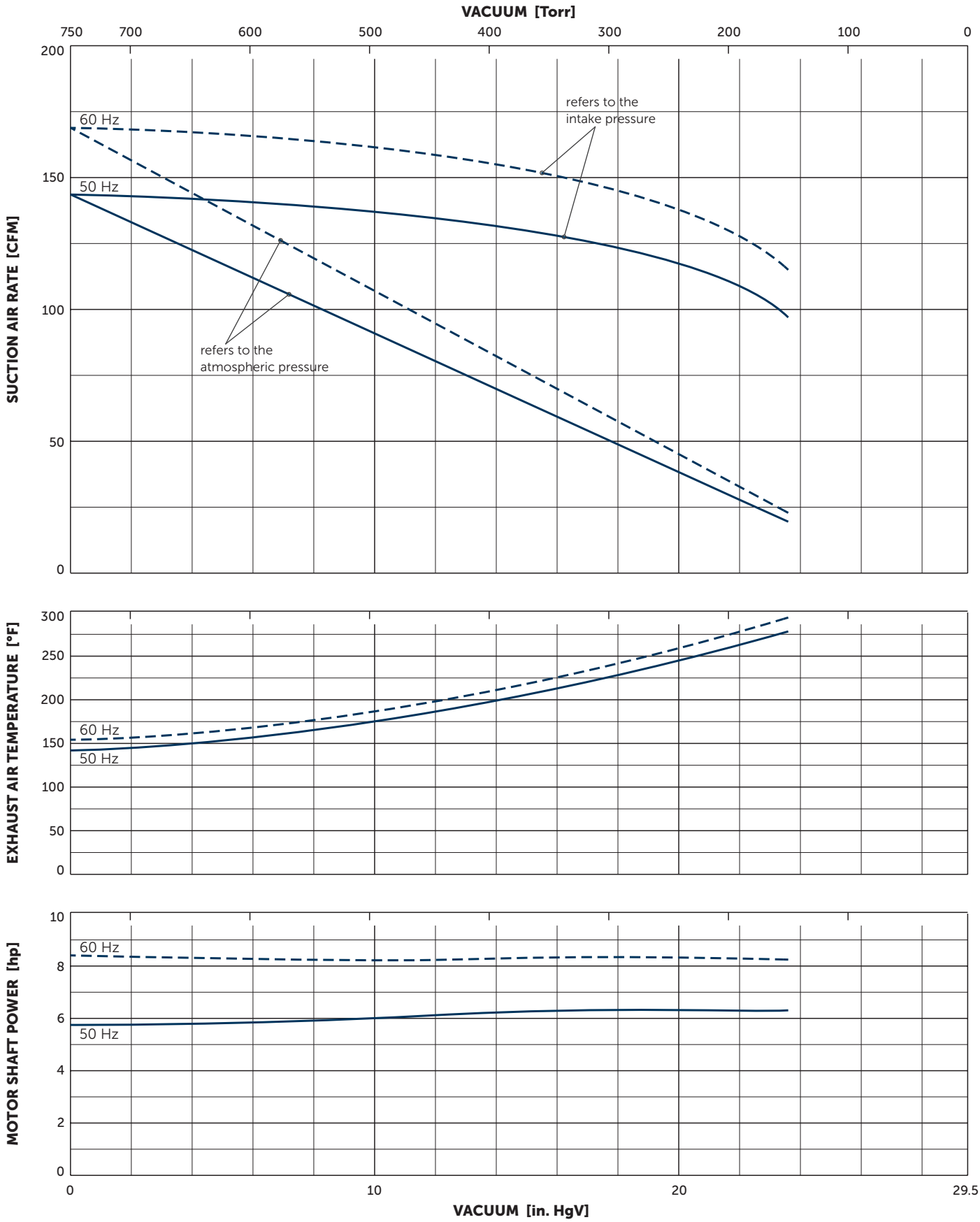

Reference data (atmosphere): 0 in. HgV, 68°F; Tolerance: ±5%

VARIANTS AND ACCESSORIES

VXLF 2.250

SERIES X: BECKER INNOVATION WITH TOP WARRANTY

Equipped with specially developed vanes, these oil-free rotary vane pumps distinguish themselves by high abrasion resistance, and with that extremely long service lives. Due to the low wear there is also minimal dust, so the series X pumps are perfectly suited for precision processes under clean room conditions.

This innovation branded by Becker is outstanding not only because of its 100 percent oil-free operation, excellent degree of efficiency and low power consumption.

In the area of sensitive vacuum, series X also guarantees precise low-pulsation air conduction.

Becker guarantees for these pumps a vane life-time of 20,000 operating hours or a maximum of 3 years. The enhanced longevity of X series pumps also extends service life intervals, and can cut out the need for frequent service visits with costly pump failures now no longer an issue.

ADVANTAGES

- Quick, clean and quiet
- Oil-free
- Wear resistant
- Energy saving
- Long-life reliability

OTHER VARIANTS AND ACCESSORIES

- **VARIAIR VTLF 2.250/0-400** with frequency inverter [1)]
- Integrated non return valve
- Increased corrosion protection
- External suction filter [1)]
- Sound proof box SH 10 [1)]

VARIAIR UNIT

VARIAIR VTLF 2.250/0-400

Example for an external suction filter

Sound proof box SH 10

[1)] See separate data sheet
- Possible combinations on request

Right of modification reserved 2022-09-16

MAKE IT BECKER.

BECKER

www.becker-international.com