TRANSLATION OF THE OPERATING INSTRUCTIONS

VT 4.10/16/25/40
VX 4.10/16/25/40
ROTARY VANE-VACUUM PUMP

dry-running

MAKE IT BECKER.

BECKER

Important notes for the user of the operating instructions

We reserve the right to make technical changes and additions to the operating instructions.

No liability is accepted for the content, in particular for damage caused by existing, non-existing or incorrect information.

Passing on this operating manual is not permitted unless expressly authorised.

Operating instructions valid for:

General designation	Rotary vane-Vakuumpumpe, hereinafter described as "pump".
Product type	dry-running
Model	VT 4.10, VT 4.16, VT 4.25, VT 4.40, VX 4.10, VX 4.16, VX 4.25 and VX 4.40
Manufacturer	**Gebr. Becker GmbH** Hölker Feld 29-31 42279 Wuppertal

CONTENT

1 TO THE OPERATING INSTRUCTIONS 4
1.1 GENERAL 4
1.2 STRUCTURE OF THE SAFETY INSTRUCTIONS 4
1.3 SAFETY SYMBOLS 4
1.4 ADDITIONAL DOCUMENTATION 5
1.5 WARRANTY AND LIABILITY 5
1.6 MODIFICATIONS AND CONVERSIONS 5
2 BASIC SAFETY INSTRUCTIONS 6
2.1 PROVISION 6
2.2 OBLIGATIONS OF THE OPERATOR 6
2.3 OBLIGATIONS OF THE STAFF 6
2.4 STAFF QUALIFICATION 7
2.5 INTENDED USE 7
2.6 INADMISSIBLE USE 7
2.7 PROTECTIVE MEASURES FOR USERS 7
2.8 INFORMATION ON RESIDUAL RISKS 8
2.9 SAFETY INSTRUCTIONS 8
2.10 BEHAVIOUR IN CASE OF DANGER AND ACCIDENTS 9
2.11 REQUIREMENT FOR STABILITY 10
2.12 OCCUPATIONAL SAFETY AND HEALTH 10
2.13 AIRBORNE SOUND EMISSIONS 10
2.14 ERGONOMICS 10
2.15 ÖKODESIGN-VERORDNUNG (EU) 2019/1781 10
3 OPERATING CONDITIONS 11
4 PUMP DESCRIPTION 12
4.1 GENERAL DESCRIPTION OF THE PUMP 12
4.2 SIZES 12
4.3 VARIANTS 12
4.3.1 VARIANTS VT 4.10-4.40 12
4.3.2 VARIANTS VX 4.10-4.40 12
4.3.3 VARIANTS VT(X) 4.10-4.40 IN SH 19 OR SH 20 ACOUSTIC ENCLOSURE 13
4.4 COMPONENT ILLUSTRATION 14

4.5 MOTORS 15
4.6 SAFETY AND PROTECTIVE DEVICES 15
4.7 TESTING THE SAFETY AND PROTECTIVE DEVICES 15
5 TRANSPORT 16
6 INSTALLATION AND COMMISSIONING 17
6.1 GENERAL REQUIREMENTS 17
6.2 PREPARATORY ACTIVITIES 17
6.2.1 CONNECTING THE MEDIA LINE 17
6.2.2 ADJUST VALVE 18
6.3 ELECTRICAL INSTALLATION 18
6.3.1 ELECTRICAL CONNECTION (STANDARD) 20
6.3.2 ELECTRICAL CONNECTION (VX 4.25/0-47) 20
6.4 SWITCH ON PUMP 21
6.5 NORMAL OPERATION 21
6.6 SWITCH OFF PUMP 21
6.7 RECOMMISSIONING 21
7 TROUBLESHOOTING / TROUBLESHOOTING 22
7.1 FAULT TABLES 22
8 MAINTENANCE, SERVICING AND DISMANTLING 25
8.1 MAINTENANCE AND SERVICING 25
8.2 PREPARATION 25
8.3 MAINTENANCE INTERVALS 26
8.4 MAINTENANCE ACTIVITIES 26
8.4.1 CLEAN FILTER 27
8.4.2 CHECK ROTARY VANE 27
8.4.3 CLEAN SURFACE WITH COMPRESSED AIR 28
8.5 MEDIA LINES 28
8.6 CONDITIONS FOR RECONNECTION 28
8.7 SPARE AND WEAR PARTS 29
8.8 TEMPORARY DECOMMISSIONING 29
8.9 CLEANING 29
8.10 DISMANTLING AND DECOMMISSIONING 29
8.11 STORAGE 30
8.12 DISPOSAL 30
9 PRODUCT DATA SHEET 31
9.1 PRODUCT OVERVIEW 31
9.2 OPERATING PARAMETERS 31
9.3 TECHNICAL DATA 32

1 TO THE OPERATING INSTRUCTIONS

1.1 GENERAL

These operating instructions are an essential part of the pump and contain the necessary information and important notes to operate the pump safely and properly. Observance of these instructions will help:

- Avoiding dangers,
- Reduce repair costs and downtime, as well as
- increase the reliability and service life of the product.

It is the responsibility of the operator to ensure the availability of this document. This applies in particular in the event of loss of the document.

All persons who carry out activities on the pump must have read and understood the operating manual and these operating instructions.

NOTE
Pay special attention to the chapter 2.

1.2 STRUCTURE OF THE SAFETY INSTRUCTIONS

Safety instructions are identified by a pictogram and a signal word. The following signal words are used to indicate dangers, prohibitions and important information:

DANGER
This signal word indicates an imminent danger that will result in serious injury or even death.

WARNING
This signal word indicates a possibly imminent danger that can result in serious injuries or even death.

CAUTION
This signal word indicates a possible imminent danger that may result in minor or severe injuries.

ATTENTION
This signal word indicates a possible imminent danger that may result in damage to property.

NOTE
This symbol indicates tips, recommendations and further information.

1.3 SAFETY SYMBOLS

The following symbols are used in these operating instructions.

Warning sign:

General warning sign

Fire hazard

Risk of tripping

Warning against hand injuries

Warning against automatic start-up

Warning of electrical voltage

Warning against hot surfaces

Hazardous substances sign:

Attention, environmentally hazardous

Commandment sign:

Attention

Use foot protection

Use hearing protection

Use hand protection

Note:

General information

1.4 ADDITIONAL DOCUMENTATION

In addition to these operating instructions, the following documents and notes must be observed:

- Safety symbols according to chapter 1.3 on the pump as well as on hazardous material containers
- Regulations on accident prevention, occupational safety and environmental protection
- Operating instructions and documentation for components, assemblies and aids provided by third-party manufacturers
- Spare parts lists
- Data sheets

1.5 WARRANTY AND LIABILITY

Warranty and liability claims in the event of personal injury or damage to property are invalid in the event of

- Failure to observe the instructions for transport and assembly;
- improper use (misuse) or improper operation;
- Failure to observe the operating instructions and the instructions contained therein;
- improper or non-executed maintenance and servicing work;
- faulty installation, commissioning, maintenance, servicing and cleaning;
- Use of incorrect operating materials, lubricants or spare parts;
- defective, incorrectly installed or dismantled protective devices;
- inadequate monitoring of components subject to wear;
- Use of externally procured equipment that has not been approved by the manufacturer;
- improper disassembly;

1.6 MODIFICATIONS AND CONVERSIONS

Modifications or conversions are prohibited without the written consent of the manufacturer and are therefore excluded.

NOTE
Description of the safety instructions in chapter 2.9

2 BASIC SAFETY INSTRUCTIONS

These operating instructions serve as a basis for the safe use and operation of the pump. The operating instructions, in particular the safety instructions and the rules and regulations applicable to the place of use, must be observed by all persons working on or with the pump.

Furthermore, the generally applicable legal and other rules and regulations for accident prevention (e.g. personal protective equipment) and environmental protection for the place of work must be followed.

NOTE

Some activities on the vacuum pump require compliance with special safety regulations. These safety instructions can be found in the respective chapters of these operating instructions.

NOTE

The operating instructions must always be kept at the place of use and be freely accessible to all persons with tasks on the vacuum pump.

The instructions of the occupational safety specialist and the instructions for action from the briefings must be followed without fail.

The pump is only intended for the intended use described in the chapter 2.5.

Use of the pump outside of its intended use is prohibited.

All work on the pump may only be carried out by qualified and trained personnel (see chapter 2.4).

For all activities on the pump, the safety instructions given in chapter 2.9 must be observed.

2.1 PROVISION

The pump is a machine in the sense of the Machinery Directive 2006/42/EC Art 2a. The pump conforms to the health and safety requirements of the Machinery Directive 2006/42/EC.

The pump may only be used after the operator has determined that the use of the pump is installed according to the state of the art.

This is fulfilled if, among other things, the operating conditions listed in these operating instructions have been fully implemented in accordance with Directive 2006/42/EC Annex 1 Para. 1.7.4.2.i.

2.2 OBLIGATIONS OF THE OPERATOR

The operator undertakes to only allow persons to work on the pump who are

- are familiar with the basic regulations of occupational safety and accident prevention;
- were instructed for the activities at the pump;
- have read and understood these operating instructions before carrying out any work on the pump;
- have reached the legal minimum age;
- are fit for health;
- are rested and not under the influence of drugs or medication;
- reliably perform the assigned work.

In addition, the operator must train the staff at regular intervals and inform them about the dangers.

The personnel of the operating company must be permanently committed to safe working practices and informed about the dangers and risks of the pump. This applies in particular to the safety instructions.

The operator must provide the personnel with the necessary protective equipment.

2.3 OBLIGATIONS OF THE STAFF

All persons entrusted with work on the pump undertake, before starting work, to

- observe the basic regulations on occupational safety and accident prevention and
- to read and observe these operating instructions

NOTE

Only persons who have read and understood these operating instructions may carry out activities on and with the pump!

2.4 STAFF QUALIFICATION

Certain activities require a specific qualification to be demonstrated by the personnel carrying them out. The following table summarises these qualifications:

Activity	People	
	Instructed persons with specialist training	Instructed operating personnel
Commissioning	x	
Operation		x
Maintenance & Servicing	x	
Disassembly	x	
Symbol "x" approved personnel		

Table 2.4: Staff qualification

2.5 INTENDED USE

The operational safety of the pump is only guaranteed if it is used as intended. Intended use also includes observing these operating instructions for this product and any components, as well as carrying out all maintenance and service work.

The pump may only be used as intended in accordance with the machine description and the technical data.

The intended use is summarised below:

- The pump evacuates air to a vacuum according to chapter 9.2
- The pumping of any other gases, especially hazardous substances, is not permitted and prohibited.
- The permissible technical parameters must be observed.
- The pump must not be operated in potentially explosive atmospheres.
- The pump must be protected from the weather.
- For any operation outside the technical parameters specified in the product data sheet, the manufacturer must be consulted.

ATTENTION

Only use the pump for its intended purpose and only use it if it is in perfect working order! This is the only way to ensure the operational safety of the pump!

2.6 INADMISSIBLE USE

- evacuating hazardous materials, especially flammable, explosive or toxic gases
- use in potentially explosive atmospheres (explosive gas/vapour/mist/air mixtures or dust/air mixtures or hybrid mixtures of air and flammable substances).
- the use of the pump in non-commercial applications
- the operation of the pump in an incompletely assembled state

2.7 PROTECTIVE MEASURES FOR USERS

When working on the pump, personal protective equipment must be worn to minimise health hazards.

The necessary protective equipment for the respective work must be worn at all times during work.

Personal protective equipment instructions posted in the work area must be followed.

WARNING

Risk of injury to hands due to crushing, cutting and high temperatures

During all work on the pump, hand protection must be worn in accordance with the glove schedule.

WARNING

Risk of injury to feet from crushing and falling objects

Foot protection must be worn during all activities at the pump.

WARNING

Hearing damage due to high volume

Hearing protection must be worn during activities that must be carried out while the pump is running.

Hand protection must be provided by the operator and must be suitable for the activities to be carried out and comply with the applicable standards (e.g. EN 388:2019-03).

Foot protection must be provided by the operator and must be suitable for the activities to be performed and comply with the applicable standards (e.g. DIN EN ISO 20345:2020-06).

Hearing protection must be provided by the operator and must be suitable for the noise levels generated and comply with the applicable standards (e.g. DIN EN 3527:2003-04).

2.8 INFORMATION ON RESIDUAL RISKS

The pump is built according to the current state of the art and the recognised safety regulations. When using the pump, health hazards for persons directly working with the pump and third parties cannot be excluded.

2.9 SAFETY INSTRUCTIONS

The hazards and risks in the respective phases of the pump's life are described below. The following hazard warnings must be observed.

DANGER

Danger to life due to electric shock / Personnel qualification

Work and tasks on the electrical system may only be carried out by qualified electricians who can prove that they have successfully completed a recognised training course in the relevant specialist field and have been instructed in the technical features of the pump.

The performance of electrical work, including the simplest auxiliary activities, is prohibited without exception for persons who do not fulfil the above conditions.

To perform tasks and activities on the pump's electrical system, work must be carried out in accordance with the five safety rules according to DIN VDE 0105.

DANGER

Danger to life due to electric shock / Measures in case of damage to the electrical installation

Damage to the electrical installation and contact with live parts can be life-threatening.

The following measures are therefore mandatory:

- In the event of damage to the electrical installation, switch off the pump immediately and notify the responsible office.
- A repair by a qualified electrician must be arranged.

DANGER

Danger to life due to unexpected start-up / countermeasures

The following steps are mandatory when preparing for maintenance and servicing activities:

1. Switch off the pump and all attached assemblies.
2. Disconnect the pump from the supply voltage and proceed according to the five safety rules (VDE105).
3. Disconnect the pump from the air supply.

DANGER

Fire and danger to life due to insufficient distances to neighbouring parts

If the pump is enclosed, minimum distances from the product must be maintained to prevent potential fires. Information on minimum distances can be found in the chapter 6.

DANGER

Danger to life due to arcing and creepage path formation when disconnecting plug connections

Always switch off the power supply before disconnecting any plug-in connections.

DANGER

Danger to life due to defective, dismantled and manipulated protective devices

The pump may only be operated if all safety and protective devices are fully present and functional!

Faulty safety and protective devices can lead to dangerous situations!

For this reason:

1. Switch off the pump immediately,
2. secure against restarting and
3. disconnect from air supply and electric current!

WARNING

Risk of injury from slipping, tripping and falling

The operator of the pump is responsible for traffic safety. If operating fluids escape from the pump, the areas must be cordoned off accordingly, marked and suitable measures taken.

WARNING

Risk of injury due to stored residual energies

The occurrence of mechanical, pneumatic and electrical residual energies on the pump after actuating the control element for stopping in an emergency or after switching off the pump must be observed!

WARNING

Danger from hot components and equipment

During operation, media and pump parts can reach high temperatures. Before intervening manually in the pump, it is therefore necessary to wait until it has cooled down enough to allow safe operation with protective gloves in order to avoid burns.

WARNING

Shutting down the pump when leaving the operating parameters

Outside the permitted operating parameters, safe operation of the pump can no longer be guaranteed. The limits of the permissible operating parameters are shown in the chapter 9.2.

WARNING

Risk of injury due to incorrect lifting conditions

If activities are carried out for assembly, the employee must be trained in the use of lifting equipment and have provided proof of this.

"The pump may only be lifted in accordance with the specifications (see chapter 5 ""Transport"")."

WARNING

Risk of injury! Danger of crushing in the hand and arm area due to product assembly.

If activities are carried out for assembly, the employee must be trained in the use of lifting equipment and have provided proof of this. Use suitable protective equipment!

WARNING

Safety risk due to spare parts not approved by the manufacturer

Becker spare parts have been checked by us for their technical requirements and for their safety. Spare parts that have not been approved can pose a danger to people and the pump.

NOTE

Wear safety shoes

Foot protection must be worn during all activities at the pump.

NOTE

Wear protective gloves

The pump must cool down until it is safe to carry out activities with protective gloves.

If this time cannot be guaranteed, protective gloves with adequate heat protection must be used. The exact model can be found in the operator's glove schedule.

2.10 BEHAVIOUR IN CASE OF DANGER AND ACCIDENTS

The protective measures to be taken and the responsibility for drawing up an occupational safety concept lie with the operator of the workplace.

"The operator must ensure safe use by following the ""Operating conditions"" described in chapter 3."

2.11 REQUIREMENT FOR STABILITY

It is best to install the pump horizontally on a flat surface.

Vertical installation (valve side down) is not permitted.

2.12 OCCUPATIONAL SAFETY AND HEALTH

The pump has been set up in accordance with the Machinery Directive 2006/42/EC and the relevant occupational health and safety and accident prevention regulations. Before starting repair work, the pump must be de-energised and depressurised to prevent accidents. Previously dismantled protective devices must be reattached before commissioning.

2.13 AIRBORNE SOUND EMISSIONS

According to Directive 2006/42/EC, information on the airborne noise emission of the pump must be given. Exact details can be found in the Machinery Directive under point 1.7.4.2.

Notes on the pump (see chapter 9.2)

2.14 ERGONOMICS

"With regard to maintenance and servicing, special behaviour with regard to ergonomics, in accordance with Directive 2006/42/EC Annex i 1.1.6 ""Ergonomics"", must be taken into account:"

2.15 ÖKODESIGN-VERORDNUNG (EU) 2019/1781

This pump falls under an exemption from EU 2019/1781 as the motor and pump have common parts.

3 OPERATING CONDITIONS

The CE conformity of the product only becomes legally valid when all product safety requirements of the "operating conditions" formulated in this chapter in the sense of Directive 2006/42/EC Annex I 1.7.4.2.i have been fully implemented by the operator. Only in this case is CE conformity valid and the pump may be operated.

Operating condition 1: Safety instructions for maintenance work

1. **Standalone products - not implemented in a control system**

   In the event of maintenance, work must be carried out with the guards dismantled. This work may only be carried out when the pump is at a standstill. In order to ensure the safe standstill of the pump, the pump must be disconnected from the electrical supply and the five safety rules according to DIN VDE 0105 must be obligatorily observed.

   If the pump is implemented in a control system by the operator, the following conditions apply to the "Maintenance" operating mode:

2. **Or, in the case of a shutdown stored in the control system, comply with the requirements of DIN EN 61800-1:2018-11.**

Operating condition 2: Ventilation of the operating room

The operator must ensure that the operating room of the pump is sufficiently ventilated.

Operating condition 3: Electrical protection of the motor

The motor must be protected according to the state of the art. It must be protected at least by a suitable protective device in accordance with DIN EN 60204-1.

Operating condition 4: Ensuring cooling

The volume flow of the cooling must be guaranteed unhindered on the intake side as well as on the exhaust air side.

Operating condition 5: Ensuring unobstructed exhaust air

As standard, the evacuated air is discharged into the environment via the maintenance cover. Optionally, the exhaust air can be discharged via a connected exhaust air line. In this case, it is essential to ensure that the exhaust air can flow unhindered through the exhaust air line without any significant counterpressure (< 100 mbar).

4 PUMP DESCRIPTION

This chapter explains the assemblies and components of the pump and how they work.

The following information is intended to help you understand how the pump works. This information can help to avoid dangers and errors due to incorrect operation.

4.1 GENERAL DESCRIPTION OF THE PUMP

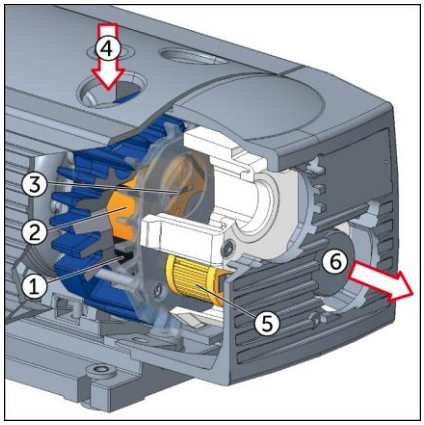

The pump is a classic dry-running rotary vane vacuum pump.

It consists of a housing, the eccentrically installed rotor (2), the radially moving vanes (3) and the inlet and outlet (4+6).

When the rotor turns, gas flows through the intake filter (5) into the enlarging chamber (1) until it is shut off by the next slide valve. The enclosed gas is then compressed until the relief valve (6) opens against atmospheric pressure.

4.2 SIZES

Several pumps of different sizes are listed in these operating instructions because they

- work according to the same principle of action,
- have the same intended use,
- are subject to the same legal and normative requirements,
- have a similar construction,
- have similar physical characteristics
- and are also very similar in terms of maintenance/service/commissioning.

4.3 VARIANTS

4.3.1 VARIANTS VT 4.10-4.40

Within the VT 4.10-4.40 series, a distinction is made between 2 variants.

The VT 4.40/0-90 is a special version with a larger scoop chamber for more suction volume.

4.3.2 VARIANTS VX 4.10-4.40

Note on the series

Series X sliders are characterised by extremely long slider service lives.

Becker guarantees a slide valve service life of 20,000 operating hours or a maximum of 3 years for this pump.

X series intake filters have a removable cover (pre-filter) that extends the service life of the filter at

extended by regular cleaning.

Within the VX 4.10-4.40 series, a distinction is made between 2 variants.

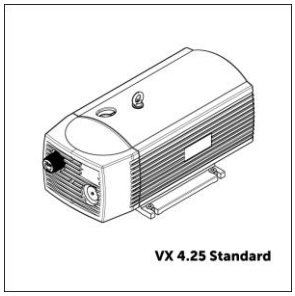

VX 4.XX (Standard)

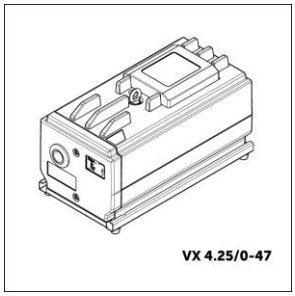

VX 4.25/0-47

The VX 4.25/0-47 is a special version with EPP bonnet, stand and cable connection.

4.3.3 VARIANTS VT(X) 4.10-4.40 IN SH 19 OR SH 20 ACOUSTIC ENCLOSURE

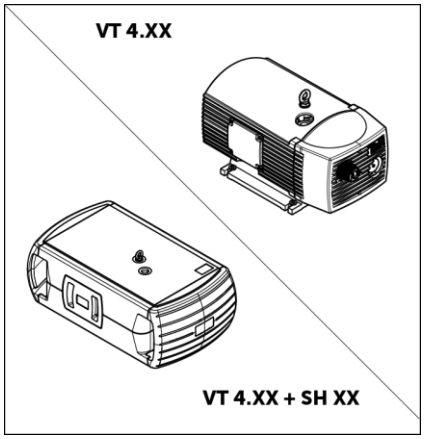

For particularly noise-sensitive applications, the pumps are also available with acoustic bonnets.

Follow the instructions in the supplementary manual 28100727500 (see homepage).

4.4 COMPONENT ILLUSTRATION

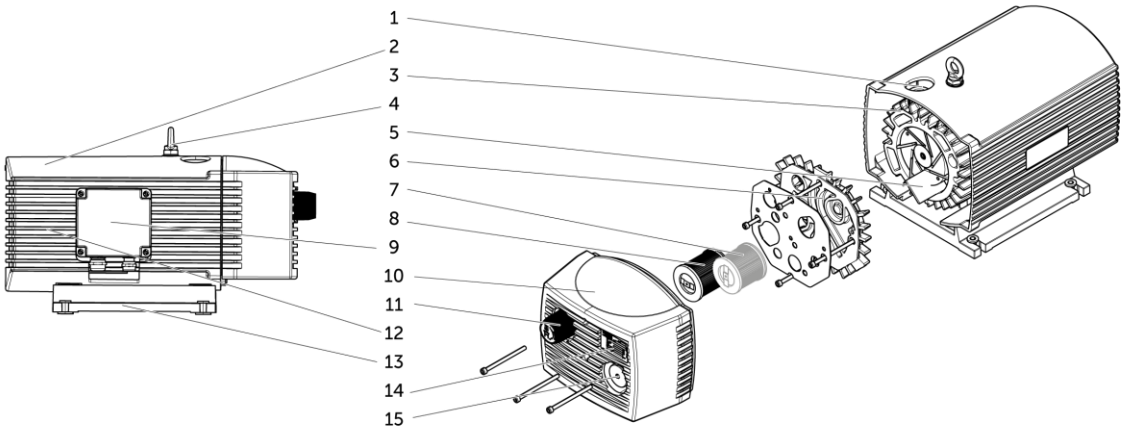

VT 4.10, VT 4.16, VT 4.25, VT 4.40, VX 4.10, VX 4.16, VX 4.25, VX 4.40

Position	Component	Function
1	Admission	Connection of the vacuum line
2	Device cover	Flow optimisation, noise reduction
3	Pump unit	The pump unit includes pump housing, piston and slide valve
4	Eyebolt	Anchor point
5	Slider	Forms the compression chambers
6	Side cover	Lateral closure of the pump casing
7	C separator cartridge	Optionally, a further filter cartridge can be installed, which additionally filters the carbon abrasion of the sliders from the exhaust air.
8	Intake filter	Filtering of the evacuated intake air (exception VX 4.25/0-47).
9	Terminal box with motor type plate	Electrical connection Conformity mark and technical data - Motor
10	Device cover	Flow optimisation, noise reduction
11	Vacuum regulating valve	Setting the required vacuum
12	Motor	Drive
13	Unit base	Stable installation and fastening of the pump
14	Device type plate	Marking of conformity and technical data - Pump
15	Abblaseventil	Evacuated air outlet, vacuum safety device

Table 4.4: Component illustration 1

4.5 MOTORS

The characteristics of the motor used can be found on the motor's type plate.

4.6 SAFETY AND PROTECTIVE DEVICES

DANGER

Danger to life due to defective, dismantled and manipulated protective devices

NOTE

For a description of the safety instructions, see chapter 2.9

The protective devices of the pump must not be dismantled, modified or put out of operation. If the protective devices are dismantled, modified or put out of operation, the pump must be shut down and secured immediately.

Defects in protective equipment must be rectified immediately. All protective equipment must be undamaged, fully assembled and in working order. Warning and information signs must be clearly visible.

All protective devices must be checked for functionality, damage and completeness after each maintenance of the pump.

If a maintenance activity requires the dismantling of protective devices, these may only be dismantled for the duration of the maintenance activity. All protective devices must be completely mounted in the designated place immediately after completion of the maintenance activities and checked for proper functioning.

The prescribed inspection intervals for protective devices must be observed and complied with. Protective devices may only be maintained, replaced and serviced by specially trained, instructed and authorised personnel.

Unauthorised tampering and manipulation with the safety-related parts of the pump are strictly prohibited and must be reported immediately to the responsible body.

All equipment serving safety and accident prevention, such as warning and information signs, covers, protective coverings, etc., must be in place. The removal or alteration of these facilities is prohibited. Damaged facilities must be repaired immediately.

Below is an overview of the pump with the designations of the protective devices.

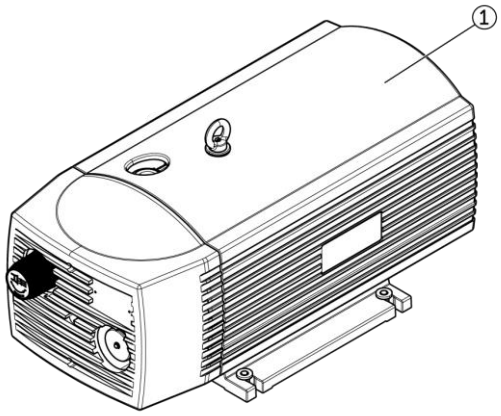

VT 4.10, VT 4.16, VT 4.25, VT 4.40, VX 4.10, VX 4.16, VX 4.25, VX 4.40

Position	Component	Location
1	Device cover	Back cover

Table 4.6: Safety and protective devices 1

4.7 TESTING THE SAFETY AND PROTECTIVE DEVICES

NOTE

All safety and protective devices must be checked regularly according to chapter 8.3.

The condition and function of safety and protective devices must be checked when:

- Modifications and repairs have been made to the pump
- Damage has occurred to the pump
- maintenance and servicing intervals are to be carried out.

5 TRANSPORT

WARNING

Risk of injury due to incorrect lifting conditions.

NOTE

wear suitable PPE.

NOTE

For a detailed description of the safety instructions, see chapter 2.9

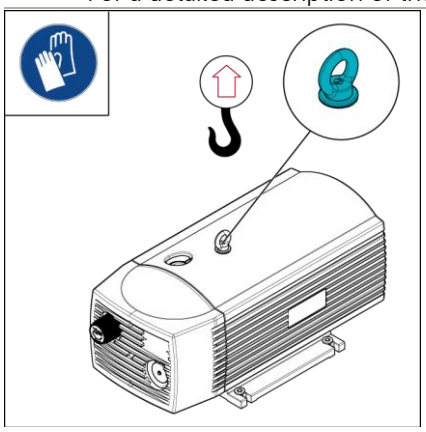

The pump may only be attached to the eyebolt. The following must be observed:

- Select lifting gear according to the total weight to be transported.
- Secure the pump against tipping and falling down.
- Always suspend the pump from all available load suspension devices.
- Do not stand under suspended loads.

6 INSTALLATION AND COMMISSIONING

6.1 GENERAL REQUIREMENTS

The installation site of the pump should be dry and protected from splash water.

We recommend installing the pump in such a way that maintenance work can be carried out easily. Depending on the type of variant or accessories fitted, additional free space may be required for this.

When assembling components and assemblies, the following points must be observed to avoid injury and damage to the pump:

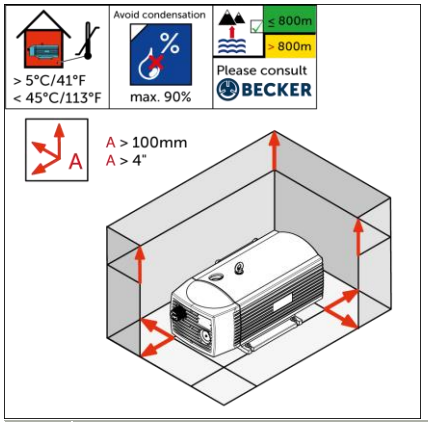

- Third-party components may only be installed if they have been approved by the manufacturer and comply with the directives and laws applicable in the country of use.
- Loose and non-pump parts must be removed from the pump environment after assembly.
- Protruding parts (pipes, cables, etc.) must be properly mounted, routed and marked.
- Contact points of components must be clean and intact.

ATTENTION

Outside the permitted operating parameters, safe operation of the pump can no longer be guaranteed (for permitted operating parameters, see chapter 9.2).

The minimum distances between the pump and neighbouring parts must be at least 10 cm. Failure to maintain the minimum clearances may result in a fire risk due to the high level of heat emitted.

NOTE

Fastening to the substrate

The pump can be installed on solid ground without anchoring. If the pump is to be installed on a substructure, it is recommended that it be fastened using elastic buffer elements.

6.2 PREPARATORY ACTIVITIES

6.2.1 CONNECTING THE MEDIA LINE

Remove sealing plug

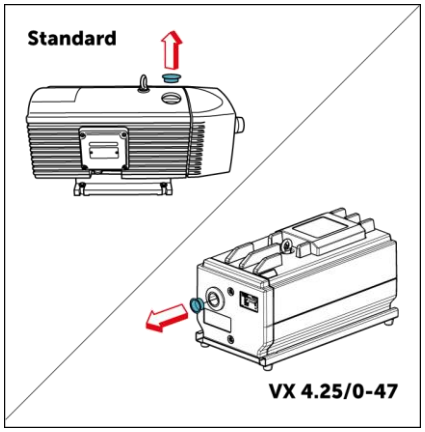

Connection features VX 4.25/0-47

For transport, the suction connection is protected against the ingress of dirt and foreign bodies with a sealing plug. This must be removed before commissioning.

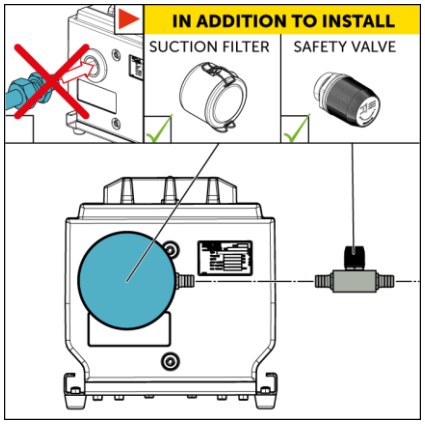

This pump variant has neither a suction filter nor a vacuum safety valve ex works.

These must be installed by the customer before commissioning.

A direct suction connection without these safety components will damage the pump.

Dimensioning the suction line

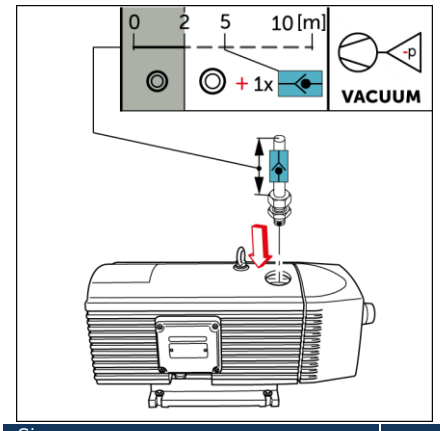

Make the pipes at least as large as the nominal diameter of the connection.

For cable lengths > 2 m, the next larger cross-section must be selected.

For pipe lengths > 5 m we recommend the additional installation of non-return valves.

Keep connections free of oil, grease, water and other contamination.

The supply line is to be installed by means of a flexible hose or fixed pipe in such a way that no mechanical tension is applied to it.

Size	Connection
VT 4.10	G 1/2 "
VT 4.16	G 1/2 "
VT 4.25	G 3/4 "
VT 4.40	G 3/4 "
VT 4.40/0-90	G 1 "
VX 4.10	G 1/2 "
VX 4.16	G 1/2 "
VX 4.25	G 3/4 "
VX 4.25/0-47	G 3/4 "
VX 4.40	G 3/4 "

Table 6.2: Connection sizes (suction side)

6.2.2 ADJUST VALVE

Adjusting the vacuum

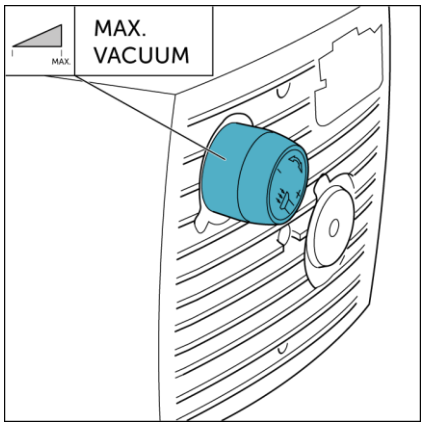

The pump is equipped with a vacuum regulating valve, which allows the vacuum required for the application to be set.

Depending on the size, this value is limited.

Exceptions VX 4.25/0-47, where a suitable valve must be fitted before commissioning.

6.3 ELECTRICAL INSTALLATION

DANGER

Danger to life from electric shock - Personnel qualification

DANGER

Danger to life due to defective, dismantled and manipulated protective devices

DANGER

Danger to life due to unexpected start-up

NOTE

For a description of the safety instructions, see Chap. 2.9

The electrical installation of the pump shall comply with the requirements of Directive 2006/42/EC and EN 60204:2019.

If the pump is integrated into a control system, it must be ensured that the pump does not restart automatically after an undesired voltage drop. The measures against unexpected start-up according to DIN EN ISO 14118:2018-07 must be implemented. This also applies after a shutdown following an emergency stop.

The following points must be observed when installing the pump:

- The pump must be protected by overload protection. Operation without an appropriate fuse is prohibited.
- The pump may be operated with a maximum of 10 start/stop cycles per hour.
- The supply line of the pump must meet the minimum requirements of the state of the art

6.3.1 ELECTRICAL CONNECTION (STANDARD)

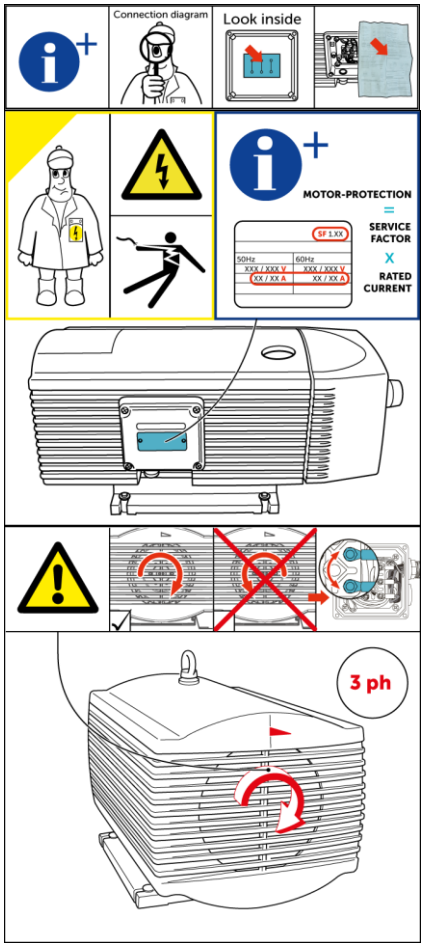

Connecting the motor

The motor must be connected according to the connection diagram (see terminal box cover or instruction leaflet in the terminal box).

The permissible connection types of the motor can be found on the motor type plate.

The motor must be protected by a motor circuit breaker for which the service factor (SF) must be taken into account. Operation without an appropriate fuse is prohibited.

Approved direction of rotation of the pump

Before commissioning, check whether the pump is rotating in the prescribed direction (observe the direction of rotation arrow on the unit cover).

To do this, start the pump only briefly (max. 3 sec.), as operation with the wrong direction of rotation will damage the pump.

If the pump does not run in the specified direction of rotation (view of the motor fan wheel), this must be changed by swapping two connection phases.

6.3.2 ELECTRICAL CONNECTION (VX 4.25/0-47)

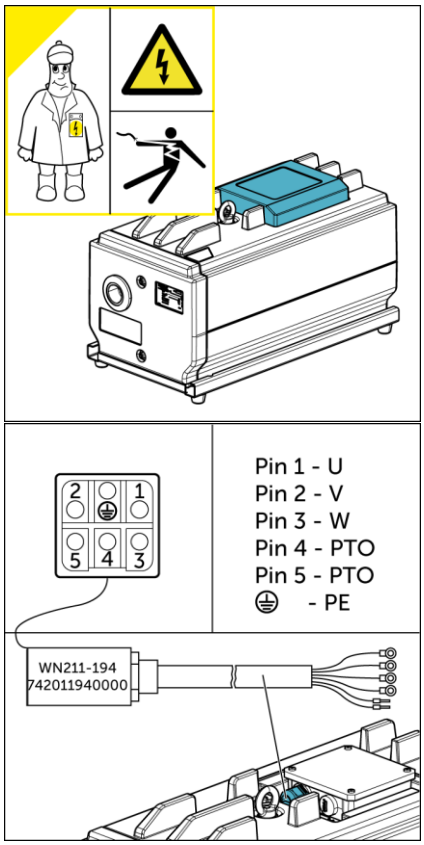

Connecting the motor

The motor must be connected as shown in the following pictures.

The motor must be protected by a motor circuit breaker for which the service factor (SF) must be taken into account. Operation without an appropriate fuse is prohibited.

The special version VX 4.25/0-47 is connected via a special connector (ILME CQM 05 pin insert 5+PE-pole).

For more information, see also separate data sheet (ds_VX 4.25 0-47).

6.4 SWITCH ON PUMP

The pump is switched on via switching elements in the application. After switching on, the pump goes directly into normal operating mode. There are no subordinate operating modes for setup, maintenance or troubleshooting.

The pump must not be switched on until it has been properly set up, the electrical installation has been properly installed and the media lines have been connected.

6.5 NORMAL OPERATION

In normal operation, the pump operates fully automatically within its physical limits, according to the customer's control.

6.6 SWITCH OFF PUMP

1. Shutdown

   To switch off, the pump must be shut down from the application and secured against being switched on again. In addition, a warning sign must be attached to the mains disconnection device.

   All electrical equipment must be individually disconnected. Maintenance and servicing activities are strictly prohibited during operation or when the pump is switched on.

2. Disconnection from the power supply

   A verifiably qualified electrician switches the motor free and disconnects it. After carrying out the 5 safety rules, non-qualified electricians may also carry out activities on the pump.

After completing the activities, follow the instructions in the chapter 6.7.

6.7 RECOMMISSIONING

After the storage and shutdown period, the pump must be checked to ensure that it is in working order. In case of non-operational capability, appropriate maintenance and servicing measures are to be carried out in order to restore operational capability.

The following points must be worked through in the specified order to enable safe recommissioning of the pump:

1. The pump must be maintained, cleaned and, if necessary, repaired on the basis of the chapters 8.1 and 8.9.
2. The electrical connection must be carried out according to chapter 6.3. The power supply must not yet be restored.
   be restored.
3. All safety devices must be mounted and checked for functionality and effectiveness. Damaged parts must be replaced immediately

"After completing the previously mentioned points and taking into account the chapter ""Switching on the pump"" see chapter 6.4, the pump can be put back into operation."

7 TROUBLESHOOTING / TROUBLESHOOTING

DANGER
Danger to life from electric shock - Personnel qualification

DANGER
Danger to life due to defective, dismantled and manipulated protective devices

DANGER
Danger to life due to unexpected start-up

WARNING
Risk of injury due to slipping, stumbling

NOTE
For a description of the safety instructions, see chapter 2.9

NOTE
Visual inspection: The pump is free of foreign objects. After initial inspection, the pump is in a damage-free condition. This also includes checking the electrical and pneumatic components and connections.

- Expel unauthorised persons from the pump

If troubleshooting is carried out immediately after operation, ensure that there is sufficient cooling time.

Pump troubleshooting is only allowed under the following conditions:

Shutdown

For troubleshooting, the pump must be shut down and secured against being switched on again. In addition, a warning sign must be attached to the mains disconnection device.

All existing electrical equipment must be disconnected individually.

If safety devices have to be dismantled or modified for troubleshooting, they must be reattached, adjusted and tested after completion of the maintenance and servicing activities and before starting the pump.

After that, a verifiably qualified electrician may carry out activities on the pump.

After completion of the activities, the pump may be put back into operation after a visual inspection.

When troubleshooting, check the pump in particular for defects.

- Damage, especially to:
  - Ventilation grilles
  - Screw fittings
  - Media lines
  - Electrical lines
- Leaks
- Loose objects
- Loose screw connections or fastenings
- Contact protection on live parts

If defects and hazards become visible during the inspection, the pump must be shut down immediately. The pump may only be put into operation if it is in perfect condition.

After completion of the activities, follow the procedure according to the point: "Recommissioning".

The chapter 8.1 must be followed.

7.1 FAULT TABLES

The following tables describe possible causes of malfunctions and the steps to be taken to eliminate them. In the event of faults that cannot be remedied by following the instructions below, please contact Gebr.

The pump does not reach the required vacuum	
Cause	
Undersized media lines	If the inlet or outlet cross-section is too small, not enough volume can be evacuated or discharged. The cross-section must be corrected in consultation with Gebr.

Table 7.1: Fault table 1

The electrical fuse has tripped	
Cause	
Short circuit	Have possible sources of error checked by a qualified electrician. Do not switch the pump on again until the work has been completed and the fault has been rectified.
Residual current (Only when using an additional residual current circuit breaker)	Have possible sources of error checked by a qualified electrician. Do not switch on the pump again until the work has been completed and the fault has been rectified.
Leakage at suction line	Check media lines for leaks and repair if necessary.
Intake filter is clogged	The pump must be shut down safely or disconnected from the power supply by a qualified electrician. The suction filter must be cleaned and replaced if necessary.

Table 7.1: Fault table 2

The motor circuit breaker has tripped	
Cause	
Overheating of the motors	The machine must not be switched on again until it has been checked by a specialist. Allow the motors to cool down. Check the forced cooling fan.
Power consumption too high	The pump may only be switched on again after it has been checked by a specialist.
Incorrect motor connection	The motor installation must be checked by a qualified electrician and corrected if necessary.
Media temperature incorrect	The machine must not be switched on again until it has been checked by a specialist.

Table 7.1: Fault table 3

The pump does not start	
Cause	
Power supply not switched on, e.g. actuated by emergency stop, voltage not enabled, start conditions of the application not fulfilled	Check operating elements and customer installation Check fulfilment of start conditions for respective operating mode
Supply voltage is not present, e.g. due to faulty installation (cable break, faulty connection).	Have possible sources of error checked by a qualified electrician. The pump may only be switched on after it has been checked by a qualified electrician.
Safety device such as motor protection switch and line protection has tripped.	Have possible sources of error checked by a qualified electrician. Do not switch on the pump again until the work has been completed and the fault has been rectified. Check the motor protection switch with the information on the rated current on the type plate and adjust the setting if necessary. If the adjustment is outside the setting range of the motor protection switch, install a suitable motor protection switch.

Table 7.1: Fault table 4

The pump does not reach the required performance and / or emits disturbing noises	
Cause	
The motor runs in the wrong direction of rotation if the pump does not prime correctly and emits loud noise.	The motor installation must be checked by a qualified electrician and corrected if necessary.
Foreign bodies sucked into the pump, stuck bearings or other components	If components have to be dismantled to remove foreign bodies, Becker Service must be notified. Likewise, only original spare parts may be used to replace damaged or worn components.
Fan damaged or clogged	Heavy contamination can cause the fan to no longer rotate correctly and thus the pump no longer cools sufficiently. The pump must be shut down safely or disconnected from the power supply by a qualified electrician. The fan guard must be removed and the fan wheel must be cleaned of dirt or replaced if damaged.
Temperature of the evacuated gas is too high	The intake temperature of the gas to be evacuated has been limited by the manufacturer to the maximum temperature shown in chapter #Kap. operating parameters#. This temperature limit must be observed.
Incorrect motor connection	The motor installation must be checked by a qualified electrician and corrected if necessary.

Table 7.1: Fault table 5

The pump does not start	
Cause	
Pump mechanically blocked, e.g. by foreign bodies in the compressor chamber.	Have the power consumption checked by a qualified electrician. Do not switch on the pump again until the work has been completed and the fault has been rectified.
Power consumption too high	Have the pre-fuse checked by a qualified electrician. Do not switch on the pump again until the work has been completed and the fault has been rectified.
Electrical supply cross-section too small	Have possible sources of error checked by a qualified electrician. Do not switch the pump on again until the work has been completed and the fault has been rectified.
Residual current (Only when using an additional residual current circuit breaker)	Have possible sources of error checked by a qualified electrician. Do not switch the pump on again until the work has been completed and the fault has been rectified.
Pump mechanically blocked, e.g. foreign body in compressor chamber	Contact Becker Service

Table 7.1: Fault table 6

The pump becomes unusually hot	
Cause	
Intake filter clogged	The pump must be shut down safely or disconnected from the power supply by a qualified electrician. The suction filter must be cleaned and replaced if necessary.
Ambient temperature of the pump is too high	Sufficient ventilation as well as compliance with the minimum distances must be checked and ensured
Media line damaged	The machine must not be switched on again until it has been checked by a specialist. Replace the media line.
Media pressure too low	The machine must not be switched on again until it has been checked by a qualified person.

Table 7.1: Fault table 7

8 MAINTENANCE, SERVICING AND DISMANTLING

DANGER
Danger to life due to electric shock

DANGER
Danger to life due to defective, dismantled and manipulated protective devices

WARNING
Danger from hot components

CAUTION
Contamination and damage to the environment by operating materials

NOTE
Wear suitable PPE

NOTE
For a description of the safety instructions, see 2.9

If a maintenance activity requires the dismantling of protective devices, these may only be dismantled for the duration of the maintenance activity. Immediately after completion of the maintenance work, all guards must be completely installed in the designated place and checked for proper functioning. The prescribed test intervals for protective devices must be observed and complied with. Protective devices may only be maintained, replaced and serviced by specially trained, instructed and authorised personnel.

Safety-related parts of the pump could be damaged or disabled by unauthorised tampering and manipulation. Unauthorised tampering and manipulation of the safety-related parts of the vacuum pump, adjustable components, is strictly prohibited and must be reported immediately to the responsible body.

8.1 MAINTENANCE AND SERVICING

As a prerequisite for safe and proper operation, it is essential that the pump is serviced and maintained at regular intervals by appropriately qualified personnel. In addition, regular maintenance and servicing increases availability and extends the service life of the pump. The recommended maintenance and servicing intervals are listed in this chapter.

8.2 PREPARATION

The responsibilities for installation, operation, maintenance and cleaning must be clearly regulated and defined.

For maintenance and servicing measures, it must be ensured that sufficient space is available for all work. The maintenance area must be secured.

The following steps must be followed when preparing for maintenance and servicing activities:

1. All existing electrical equipment must be individually disconnected. Maintenance during operation or when the pump is switched on is strictly prohibited.
2. If safety devices have to be dismantled or modified, they must be refitted, adjusted and tested immediately after completion of the maintenance and servicing activities and before the pump is started.
3. After that, a verifiably qualified electrician may carry out activities on the pump, taking into account the 5 safety rules.

After completion of the activities, the pump may be put back into operation after a visual inspection.

8.3 MAINTENANCE INTERVALS

The following overview shows the maintenance intervals:

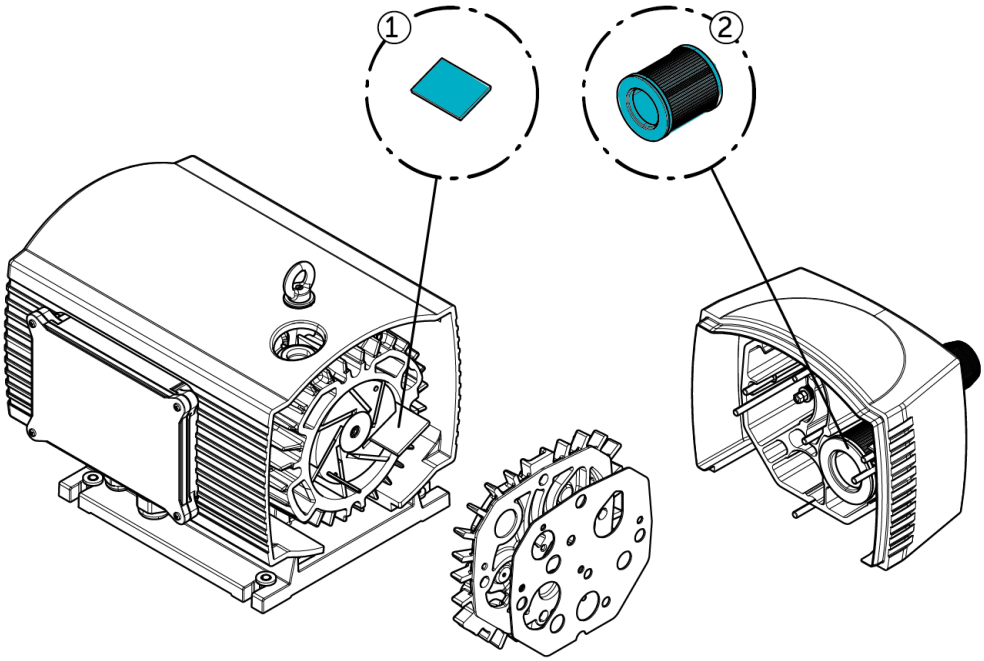

VT 4.10, VT 4.16, VT 4.25, VT 4.40

Component	40 - 200 h	3000 h	8000 h
Intake filter	check, clean, change		
Rotary vane		(switch), measure	
Housing	clean		
General overhaul			carry out
Protective devices	Visual inspection		

Table 8.3: Maintenance intervals 1

VX 4.10, VX 4.16, VX 4.25, VX 4.40

Component	40 - 200 h	7500 h	20000 h
Intake filter	check, clean, change		
Rotary vane		(switch), measure	
Housing	clean		
General overhaul			carry out
Protective devices	Visual inspection		

Table 8.3: Maintenance intervals 2

8.4 MAINTENANCE ACTIVITIES

DANGER
Danger to life due to defective, dismantled and manipulated protective devices

WARNING
Danger from hot components

NOTE
Wear suitable PPE

NOTE
For a description of the safety instructions, see 2.9

The safety instructions must be observed:

- Use appropriate tools and handle with care.
- Personal protective equipment must be used to prevent injury from tools or components.
- The maintenance area must be kept clean and tidy. Objects lying around can be a tripping hazard
- If there is any uncertainty, consult the supervisor or the manufacturer.

The maintenance plan provides for the following activities:

8.4.1 CLEAN FILTER

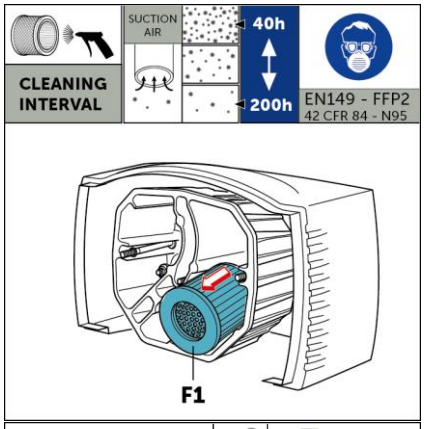

Intake filter - F1

Depending on the degree of contamination of the intake air, the filter cartridge becomes clogged. It must be cleaned with compressed air at the intervals mentioned above, but at least every 200 hours.

During cleaning, wear protective goggles and an FFP2 mask according to EN 149:2008.

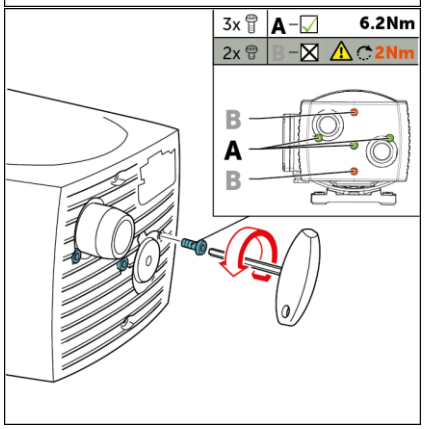

The filter cartridge is installed behind the front cover, which is fastened with 3 Allen screws (A). Loosen them, remove the filter cartridge and blow it through with compressed air from the inside to the outside.

If the filter's function is restricted (clogged, oily, greasy or damaged) even after the cleaning process, it must be replaced.

Only use original spare parts from Gebr.

The intake filters installed in the X series have a removable cover (pre-filter) that extends the life of the filter when cleaned regularly.

For cleaning, remove the pre-filter from the actual intake filter and blow off both filters with compressed air.

8.4.2 CHECK ROTARY VANE

ATTENTION
It is imperative that the minimum slide widths are adhered to, otherwise the slides may break and cause damage to the pump.

The X series with specially designed sliders achieves improved slider service life due to less abrasion.Attention - The sliders of the VX series are not compatible with the VT series.

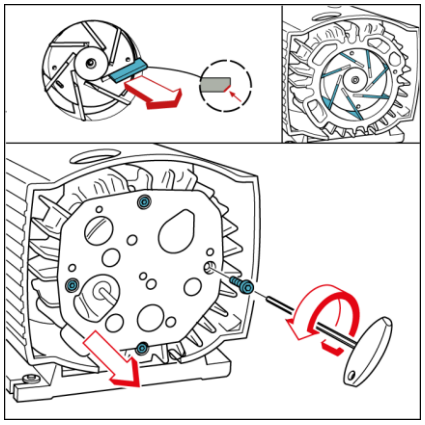

The sliders are also installed behind the front cover. Loosen and remove them as described in the previous point.

The side cover underneath is fastened with 4 Allen screws. Loosen these and remove the side cover.

Pull the sliders out of the slider grooves of the piston.

Visual inspection for damage and measure slide width, replace slide if necessary.

When reassembling the sliders, make sure that they are installed in the correct position.

Blow out the housing with dry compressed air.

Slide widths:

Size	Minimum width	Size	Minimum width
VT 4.10	18 mm	VX 4.10	18 mm
VT 4.16	21 mm	VX 4.16	21 mm
VT 4.25	28 mm	VX 4.25	28 mm
VT 4.40	28 mm	VX 4.25/0-47	28 mm
VT 4.40/0-90	33 mm	VX 4.40	28 mm

Table 8.4: Slide widths

8.4.3 CLEAN SURFACE WITH COMPRESSED AIR

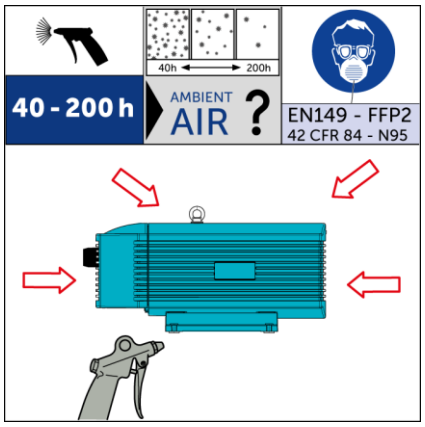

Clean surface with compressed air

The pump must be cleaned regularly. The interval depends on the degree of contamination on the casing.

During cleaning, wear protective goggles and an FFP2 mask according to EN 149:2008.

8.5 MEDIA LINES

WARNING

Risk of injury due to stored residual energies

Lines, hoses, pipes, valves and connections must be checked for damage (leaks) at regular intervals.

It is essential to observe the following instructions when carrying out maintenance and servicing work on media lines:

- Before starting work on media lines, the system must be depressurised and secured against being switched on again. Residual energy must be dissipated or discharged. Residual liquids in media lines must be drained off

8.6 CONDITIONS FOR RECONNECTION

Before restarting after maintenance and servicing activities, the following points must be observed:

- Unauthorised persons are to be expelled from the pump.
- Check for proper connection between the pump and the media lines.
- The media lines must be checked for leaks and damage.
- The power supply must be checked for damage and proper functioning.
- All protective devices must be present, functional and tested.

8.7 SPARE AND WEAR PARTS

WARNING
Safety risk due to spare parts not approved by the manufacturer

A comprehensive spare parts list with all spare and wear parts of the series listed here can be found on our homepage under the following link:

www.becker-international-shop.com

8.8 TEMPORARY DECOMMISSIONING

The following steps must be observed in the event of temporary decommissioning:

1. Shutdown
2. To switch off, the pump must be shut down and secured against being switched on again. In addition, a warning sign must be attached to the mains disconnection device.
3. All existing electrical equipment must be disconnected individually.
4. Disconnection from the power supply
5. A verifiably qualified electrician switches the motor free and disconnects it. After carrying out the 5 safety rules, non-qualified electricians may also carry out activities on the pump.
6. After completion of the decommissioning, the activities under the item: "Recommissioning" must be followed.

8.9 CLEANING

DANGER
Danger to life due to unexpected start-up

DANGER
Danger to life due to defective, dismantled and manipulated protective devices

WARNING
Risk of injury from slipping, tripping and falling

WARNING
Danger from hot components

ATTENTION
Incorrectly executed cleaning and the use of incorrect cleaning agents or cleaning equipment (e.g. high-pressure cleaners) can cause damage to the pump.

NOTE
wear suitable PPE.

NOTE
For a description of the safety instructions, see chapter 2.9

The entire pump must be cleaned at regular intervals depending on the amount of dust. This includes cleaning all surfaces of the pump with a compressed air gun and moistened cleaning cloth.

The cleaning instructions of the manufacturers of components and assemblies are to be observed

The use of solvents or cleaning agents containing solvents is prohibited.

The use of cleaning agents that are highly flammable or generally flammable is prohibited!

The legal regulations for environmental protection must be observed during cleaning.

Restarting the pump is only permitted if there is no damage to the pump and no person is exposed to danger.

8.10 DISMANTLING AND DECOMMISSIONING

DANGER
Danger to life due to unexpected start-up

DANGER
Danger to life from electric shock - Personnel qualification

WARNING
Risk of injury from slipping, tripping and falling

WARNING
Danger from hot components

NOTE
wear suitable PPE.

NOTE
For a description of the safety instructions, see chapter 2.9

The following steps must be observed during dismantling and decommissioning:

1. Switch off the pump and release the drive.
2. Switch off the power supply and secure it against being switched on again unintentionally.
3. Disconnect the supply line of the drive.
4. Shut off media lines and divert pressure differences if necessary.
5. Disconnect the media lines from the pump.
6. Clean the pump thoroughly
7. Disassemble the pump in reverse order of assembly or according to separate disassembly instructions. Loose parts must be secured to prevent them from tipping over or falling down.
8. Protect the pump from further contamination

8.11 STORAGE

The following requirements for the storage location must be observed during storage in order to store the unused pump in a proper condition over a longer period of time. If the following requirements are not observed, damage to the pump may occur. The storage location must

- the storage place must be dry and clean
- the storage place must be level
- the storage place must be protected from sudden changes in temperature and humidity
- the storage location must be protected from salt spray, industrial gases, corrosive liquids, rodents and fungal attack
- Suction and pressure connections of the pump must be closed, filter covers must be fitted.

8.12 DISPOSAL

NOTE
For a description of the safety instructions, see chapter 2.9

Disposal of the pump takes place in the dismantled state. See chapter 8.10

When disposing of the pump, the relevant local statutory environmental regulations for environmental protection must be observed.

9 PRODUCT DATA SHEET

9.1 PRODUCT OVERVIEW

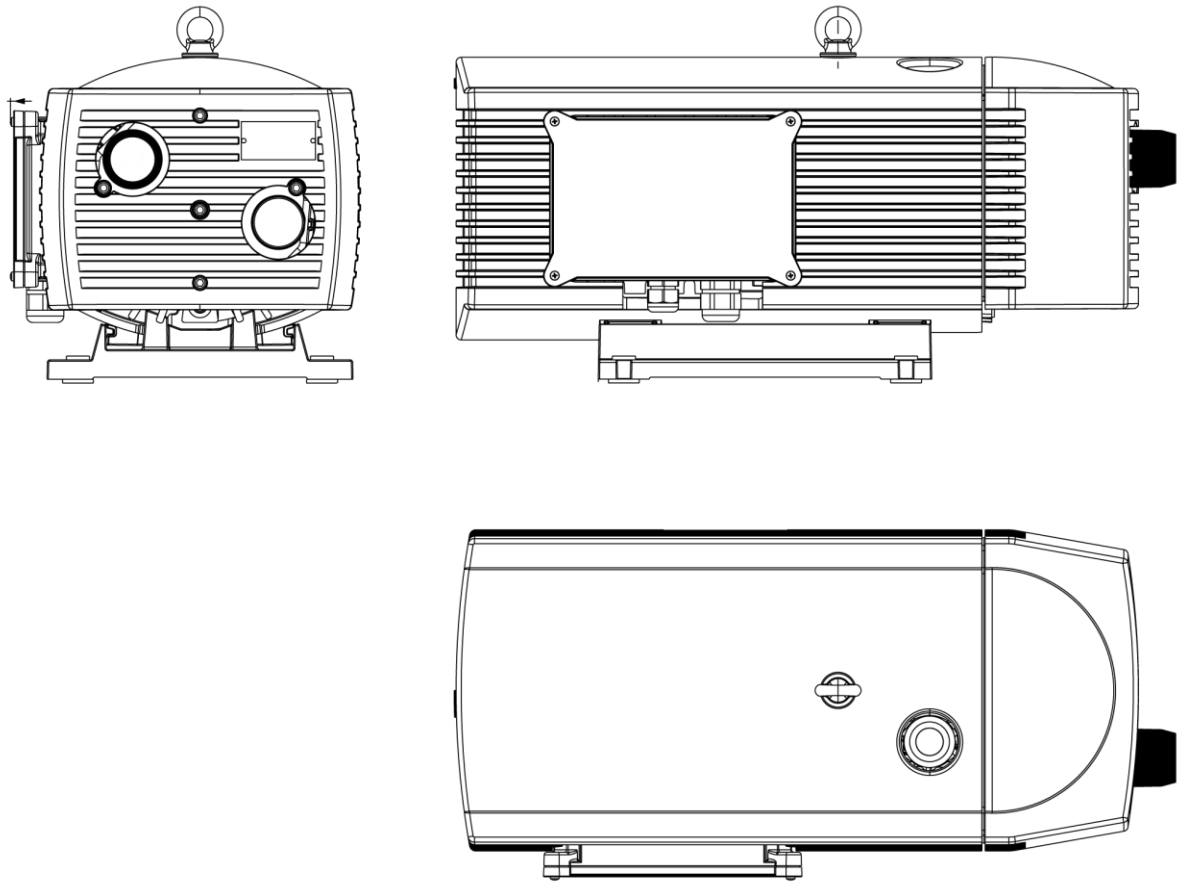

Example: VT 4.40

9.2 OPERATING PARAMETERS

Variant	VT 4.10	VT 4.16	VT 4.25	VT 4.40
Volume flow min.	10 m^3/h (50 Hz)	16 m^3/h (50 Hz)	25 m^3/h (50 Hz)	40 m^3/h (50 Hz)
Volume flow max.	12 m^3/h (60 Hz)	19 m^3/h (60 Hz)	30 m^3/h (60 Hz)	48 m^3/h (60 Hz)
Vacuum	150 mbar (abs)	150 mbar (abs)	150 mbar (abs)	150 mbar (abs)
Weight	16 kg	22,5 kg	26 - 29 kg	38 - 41 kg
Sound level min.	60 dB(A) (50 Hz)	61 dB(A) (50 Hz)	62 dB(A) (50 Hz)	67 dB(A) (50 Hz)
Sound level max.	62 dB(A) (60 Hz)	64 dB(A) (60 Hz)	67 dB(A) (60 Hz)	72 dB(A) (60 Hz)
Permissible ambient temperature	5 - 45 °C	5 - 45 °C	5 - 45 °C	5 - 45 °C
Exhaust air temperature max.	87 °C	93 °C	118 °C	126 °C
Maximum installation height	800 m ü.NN.	800 m ü.NN.	800 m ü.NN.	800 m ü.NN.
Maximum humidity of the intake air	90 %	90 %	90 %	90 %

Table 9.2: Operating parameters

Variant	VT 4.40/0-90	VX 4.10	VX 4.16	VX 4.25
Volume flow min.	47 m^3/h (50 Hz)	10 m^3/h (50 Hz)	16 m^3/h (50 Hz)	25 m^3/h (50 Hz)
Volume flow max.	55 m^3/h (60 Hz)	12 m^3/h (60 Hz)	19 m^3/h (60 Hz)	30 m^3/h (60 Hz)
Vacuum	150 mbar (abs)	100 mbar (abs)	100 mbar (abs)	100 mbar (abs)
Weight	38 - 41 kg	16 kg	22,5 kg	26 - 29 kg
Sound level min.	67 dB(A) (50 Hz)	60 dB(A) (50 Hz)	61 dB(A) (50 Hz)	62 dB(A) (50 Hz)
Sound level max.	72 dB(A) (60 Hz)	62 dB(A) (60 Hz)	64 dB(A) (60 Hz)	67 dB(A) (60 Hz)
Permissible ambient temperature	5 - 45 °C	5 - 45 °C	5 - 45 °C	5 - 45 °C
Exhaust air temperature max.	85 °C	87 °C	93 °C	118 °C
Maximum installation height	800 m ü.NN.	800 m ü.NN.	800 m ü.NN.	800 m ü.NN.
Maximum humidity of the intake air	90 %	90 %	90 %	90 %

Table 9.2: Operating parameters

Variant	VX 4.25/0-47	VX 4.40
Volume flow min.	25 m^3/h (50 Hz)	40 m^3/h (50 Hz)
Volume flow max.	30 m^3/h (60 Hz)	48 m^3/h (60 Hz)
Vacuum	100 mbar (abs)	100 mbar (abs)
Weight	34,5 kg	38 - 41 kg
Sound level min.	55 dB(A) (50 Hz)	67 dB(A) (50 Hz)
Sound level max.	60 dB(A) (60 Hz)	72 dB(A) (60 Hz)
Permissible ambient temperature	5 - 45 °C	5 - 45 °C
Exhaust air temperature max.	118 °C	126 °C
Maximum installation height	800 m ü.NN.	800 m ü.NN.
Maximum humidity of the intake air	90 %	90 %

Table 9.2: Operating parameters

9.3 TECHNICAL DATA

Technical data sheets for the pumps can be found on our homepage under the following link:

www.becker-international.com/download

MAKE IT BECKER.

28200000200 | 2023-03-10 | All rights reserved