DATA SHEET

U 5.101

ROTARY VANE–VACUUM PUMPS

oil-lubricated

air-cooled

MAKE IT BECKER.

BECKER

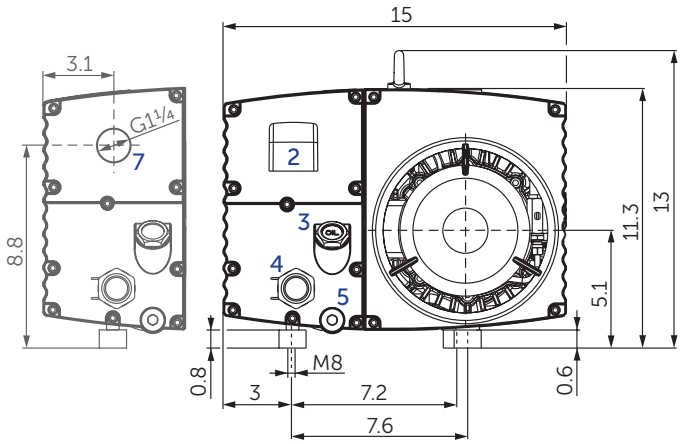

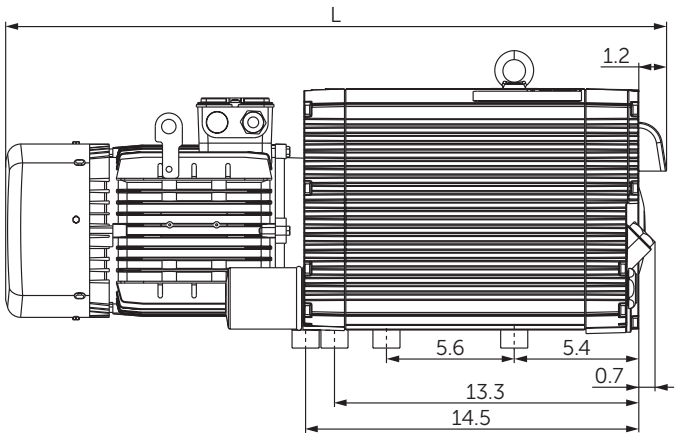

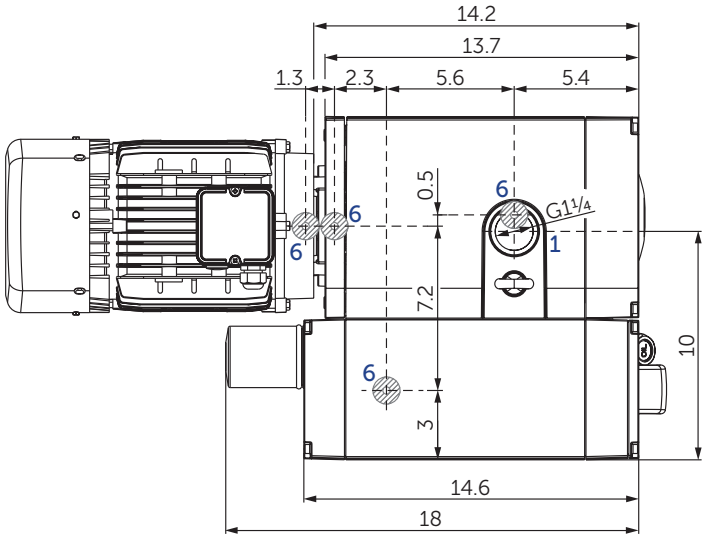

1 Vacuum connection (G1¼)
2 Exhaust air (diverter)
3 Oil filler cap (G¾)
4 Oil sight glas (G1)
5 Screw plug for oil drain (G½)
6 Rubber buffer position
7 optional: threaded connector for exhaust air (G1¼)

- incl. gas ballast valve, non-return valve, oil separator and oil filter
- The motor illustration may vary
- Dimensions in inch

Nominal capacity		Vacuum for continous operation		Motors		Emission sound pressure level [1]		Weight w/o motor	Oil [2]
CFM		Torr		hp		dB(A)		lbs	U.S. gal.
50 Hz	60 Hz	50 Hz	60 Hz	50 Hz	60 Hz	50 Hz	60 Hz		
58.8	70.6	<0.075–300	<0.075–300	3.0	3.5	65	68	88.2	0.53

[1] According to DIN EN ISO 11203, accuracy class of measurement: class 2, extended measurement uncertainty: 3 dB 39.4 inch distance, at medium load, both connection sides piped
[2] Becker Lube: Synthetic Oil • Premium Synthetic Oil (PAO) • Food Grade Vacuum Pump Oil

- Gas ballast valve: vacuum 0.75 Torr with opened gas ballast valve; water vapour tolerance max. 5.25 Torr; water vapour capacity max. 0.238 U.S.gal./h (at 185°F operating temperature)

3~ Motors													L
#	50 Hz					60 Hz					Version	Weight	
	hp	V		rpm	A	hp	V		rpm	A		lbs	inch
01	3.0	Δ230/Y400 Y380 Y415	IE3 IE3 IE3	1460 1454 1464	7.45/4.3 4.5 4.3	3.0	Y460	IE3	1766	3.8	CC055B NEMA Premium UL(E68554) CSA IP55 ISO F PTC	63.9	27.8
						3.5	Δ208 Δ230 Y400 Y460		1740 1752 1752 1758	9.7 8.7 5.0 4.4			
02						3.5	YY230/Y460 YY208	IE3	1765 1755	9.3/4.6 9.7	UL(E365362) • CSA CC334B IP55 • ISO F • bimetal	81.6	29.2
03	3.0	Δ200/Y350	IE3	1460	11.2/6.5	3.5	Δ220/Y380-400 Δ200/Y350	IE3	1750 1740	10.6/6.1–5.8 10.8/6.2	UL(E365362) • CSA IP55 • ISO F • bimetal	63.9	28.7
04						3.5	Δ400/Y690	IE3	1760	5.25/3.03	UL(E365362) • CSA IP55 • ISO F • bimetal	81.6	29.2

- Type plate data on current consumption and rotation speed of the motors may vary. Tolerance -1.5/+2% in each case.

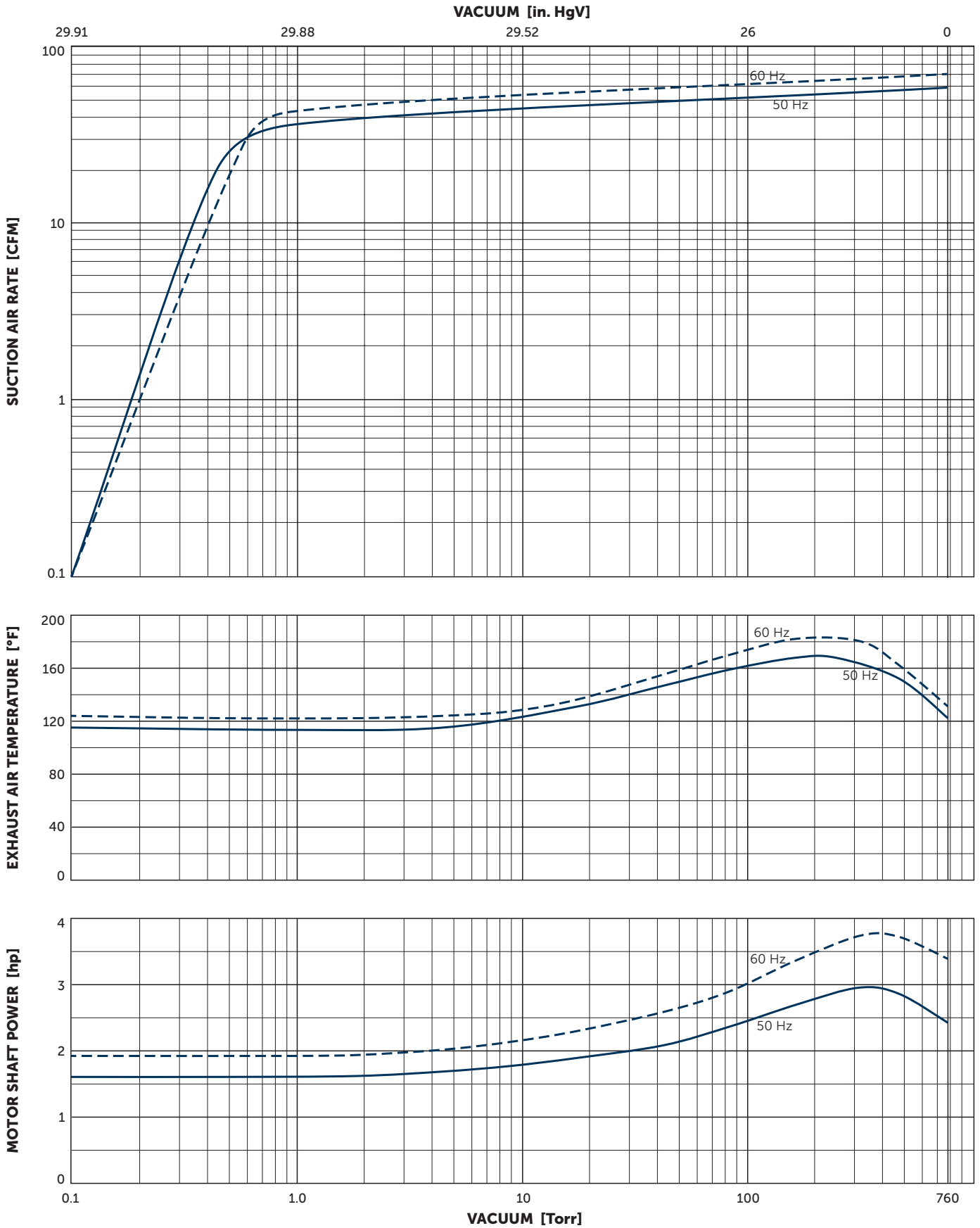

Suction air rate refers to the intake pressure
Reference data (atmosphere): 0 In. HgV / 760 Torr, 68°F; Tolerance: ±10%

VARIANTS AND ACCESSORIES

- **U 5.101 O2-PACK** [1] for packaging with an overconcentration of oxygen
- **VARIAIR U 5.101** [1] with frequency inverter
- **U 5.101/0-62 XL** with enlarged oil tank (0.859 US gal. of oil) and high efficient triple stage oil separation (motors and characteristic curves like standard pump)

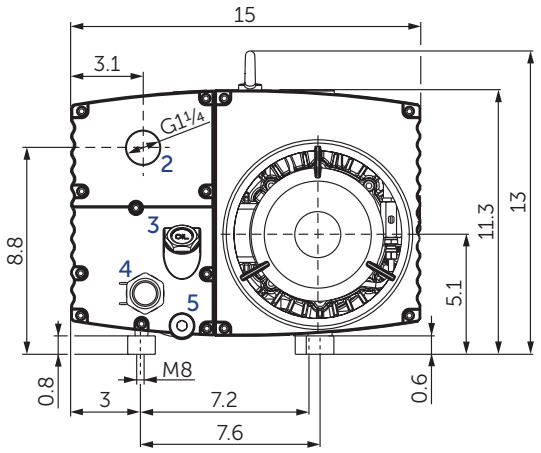

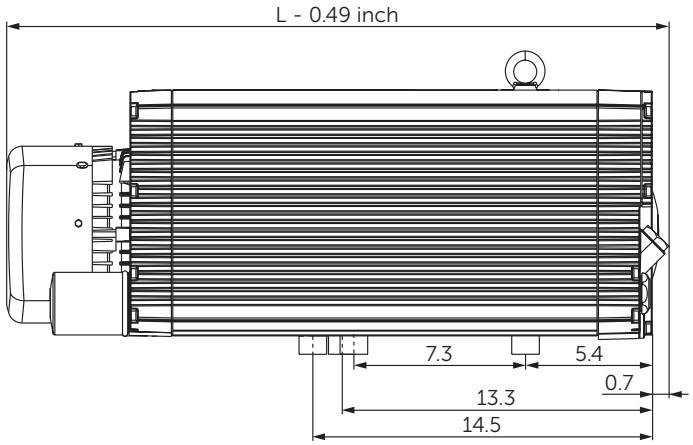

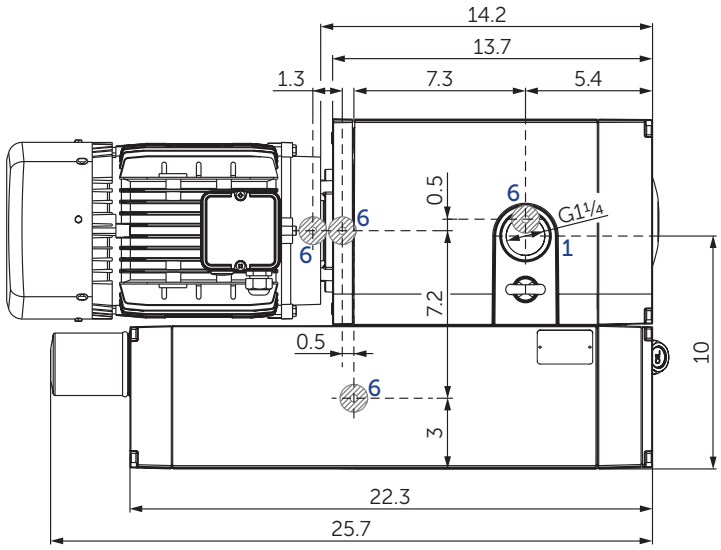

U 5.101/0-62 XL

1 Vacuum connection (G1¼)
2 Exhaust air connection (G1¼)
3 Oil filler cap (G¾)
4 Oil sight glas (G1)
5 Screw pluGfor oil drain (G½)
6 Rubber buffer position
L Length see motor table

- incl. gas ballast valve, non-return valve, oil separator and oil filter
- The motor illustration may vary
- Dimensions in mm [inch]

[1] See separate data sheet
- Combination options on request

ACCESSORIES

- External **suction filter** [1)]
- **Oil:** Becker Lube Synthetic Oil,Premium Synthetic Oil (PAO) and Food Grade Vacuum Pump Oil

1 **Oil level switch** [1)] (G1)
2 **Oil temperature monitor** [1)] (G½)
3 **Maintenance indicator** [1)] (G¾) for oil separating elements
4 **Ball valve** (G½), with locking and hose connector 19 mm [0.75 inch]
5 **Temperature sensor PT100**
6 **Water cooler U5.100-0-114.2** [1)]

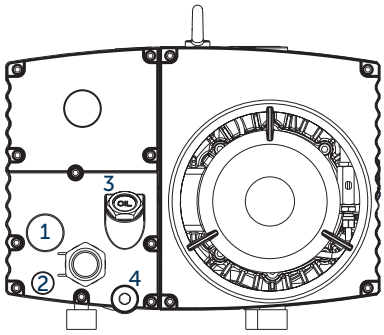

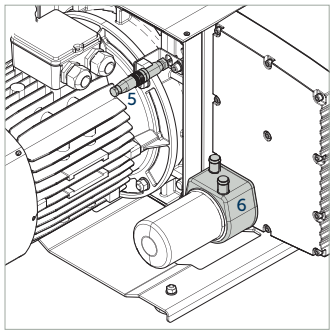

Oil level switch

Oil temperature monitor

Maintenance indicator

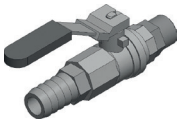
Ball valve

U 5.101 versions	Gas ballast valve		Threaded connector for exhaust air	Prepared for additional accessories (e.g. oil level switch; see above)
	Standard	for increased water vapour tolerance		
U 5.101/0-00	✓ vacuum 0.75 Torr with opened gas ballast valve; water vapour tolerance max. 5.25 Torr; water vapour capacity max. 0.238 U.S.gal./h (at 185°F operating temperature)			
U 5.101/0-01			✓ (G1¼)	
U 5.101/0-02				✓
U 5.101/0-03			✓ (G1¼)	✓
U 5.101/0-04		✓ vacuum 2.25 Torr with opened gas ballast valve; water vapour tolerance max. 46.5 Torr; water vapour capacity max. 0.634 U.S.gal./h (at 185°F operating temperature)		
U 5.101/0-05			✓ (G1¼)	
U 5.101/0-06				✓
U 5.101/0-07			✓ (G1¼)	✓

[1)] See separate data sheet
- Combination options on request

Right of modification reserved 2022-09-16

MAKE IT BECKER.

BECKER

www.becker-international.com