TRANSLATION OF THE OPERATING INSTRUCTIONS

O 5.10/16/21/25
U 5.40
ROTARY VANE-VACUUM PUMP

oil-lubricated

MAKE IT BECKER.

BECKER

Important notes for the user of the operating instructions

We reserve the right to make technical changes and additions to the operating instructions.

No liability is accepted for the content, in particular for damage caused by existing, non-existing or incorrect information.

Passing on this operating manual is not permitted unless expressly authorised.

Operating instructions valid for:

General designation	Rotary vane-Vakuumpumpe, hereinafter described as "pump".
Product type	oil-lubricated
Model	O 5.10, O 5.16, O 5.21, O 5.25 and U 5.40
Manufacturer	**Gebr. Becker GmbH** Hölker Feld 29-31 42279 Wuppertal

CONTENT

1 TO THE OPERATING INSTRUCTIONS 4
1.1 GENERAL 4
1.2 STRUCTURE OF THE SAFETY INSTRUCTIONS 4
1.3 SAFETY SYMBOLS 4
1.4 ADDITIONAL DOCUMENTATION 5
1.5 WARRANTY AND LIABILITY 5
1.6 MODIFICATIONS AND CONVERSIONS 5
2 BASIC SAFETY INSTRUCTIONS 6
2.1 PROVISION 6
2.2 OBLIGATIONS OF THE OPERATOR 6
2.3 OBLIGATIONS OF THE STAFF 6
2.4 STAFF QUALIFICATION 7
2.5 INTENDED USE 7
2.6 INADMISSIBLE USE 7
2.7 PROTECTIVE MEASURES FOR USERS 7
2.8 INFORMATION ON RESIDUAL RISKS 8
2.9 SAFETY INSTRUCTIONS 8
2.10 BEHAVIOUR IN CASE OF DANGER AND ACCIDENTS 10
2.11 REQUIREMENT FOR STABILITY 10
2.12 OCCUPATIONAL SAFETY AND HEALTH 10
2.13 AIRBORNE SOUND EMISSIONS 10
2.14 ERGONOMICS 10
3 OPERATING CONDITIONS 11
4 PUMP DESCRIPTION 12
4.1 GENERAL DESCRIPTION OF THE PUMP 12
4.2 SIZES 12
4.3 VARIANTS 12
4.3.1 VARIANTS O 5.10-O 5.25 12
4.3.2 VARIANTS U 5.40 12
4.4 COMPONENT ILLUSTRATION 14
4.5 MOTORS 15
4.6 SAFETY AND PROTECTIVE DEVICES 15

4.7 TESTING THE SAFETY AND PROTECTIVE DEVICES 15
4.8 OPERATING SUPPLIES AND CHEMICALS 16
5 TRANSPORT 17
6 INSTALLATION AND COMMISSIONING 18
6.1 GENERAL REQUIREMENTS 18
6.2 PREPARATORY ACTIVITIES 19
6.2.1 FILL IN OIL 19
6.2.2 CONNECTING THE MEDIA LINES 19
6.3 ELECTRICAL INSTALLATION 20
6.4 SWITCH ON PUMP 21
6.5 NORMAL OPERATION 21
6.6 SWITCH OFF PUMP 21
6.7 RECOMMISSIONING 22
7 TROUBLESHOOTING / TROUBLESHOOTING 23
7.1 FAULT TABLES 23
8 MAINTENANCE, SERVICING AND DISMANTLING 26
8.1 MAINTENANCE AND SERVICING 26
8.2 PREPARATION 26
8.3 MAINTENANCE INTERVALS 27
8.4 MAINTENANCE ACTIVITIES 28
8.5 MEDIA LINES 31
8.6 CONDITIONS FOR RECONNECTION 32
8.7 SPARE AND WEAR PARTS 32
8.8 TEMPORARY DECOMMISSIONING 32
8.9 CLEANING 32
8.10 DISMANTLING AND DECOMMISSIONING 33
8.11 STORAGE 33
8.12 DISPOSAL 33
9 PRODUCT DATA SHEET 35
9.1 PRODUCT OVERVIEW 35
9.2 OPERATING PARAMETERS 35
9.3 OPERATING SUPPLIES 36
9.4 TECHNICAL DATA 37

1 TO THE OPERATING INSTRUCTIONS

1.1 GENERAL

These operating instructions are an essential part of the pump and contain the necessary information and important notes to operate the pump safely and properly. Observance of these instructions will help:

- Avoiding dangers,
- Reduce repair costs and downtime, as well as
- increase the reliability and service life of the product.

It is the responsibility of the operator to ensure the availability of this document. This applies in particular in the event of loss of the document.

All persons who carry out activities on the pump must have read and understood the operating manual and these operating instructions.

NOTE
Pay special attention to the chapter 2.

1.2 STRUCTURE OF THE SAFETY INSTRUCTIONS

Safety instructions are identified by a pictogram and a signal word. The following signal words are used to indicate dangers, prohibitions and important information:

DANGER
This signal word indicates an imminent danger that will result in serious injury or even death.

WARNING
This signal word indicates a possibly imminent danger that can result in serious injuries or even death.

CAUTION
This signal word indicates a possible imminent danger that may result in minor or severe injuries.

ATTENTION
This signal word indicates a possible imminent danger that may result in damage to property.

NOTE
This symbol indicates tips, recommendations and further information.

1.3 SAFETY SYMBOLS

The following symbols are used in these operating instructions.

Warning sign:

- General warning sign
- Fire hazard
- Risk of tripping
- Warning against hand injuries
- Warning against automatic start-up
- Warning of electrical voltage
- Warning against hot surfaces

Hazardous substances sign:

- Attention, environmentally hazardous

Commandment sign:

- Attention
- Use foot protection

Use hearing protection

Use hand protection

Note:

General information

1.4 ADDITIONAL DOCUMENTATION

In addition to these operating instructions, the following documents and notes must be observed:

- Safety symbols according to chapter 1.3 on the pump as well as on hazardous material containers
- Regulations on accident prevention, occupational safety and environmental protection
- Operating instructions and documentation for components, assemblies and aids provided by third-party manufacturers
- Spare parts lists
- Data sheets

1.5 WARRANTY AND LIABILITY

Warranty and liability claims in the event of personal injury or damage to property are invalid in the event of

- Failure to observe the instructions for transport and assembly;
- improper use (misuse) or improper operation;
- Failure to observe the operating instructions and the instructions contained therein;
- improper or non-executed maintenance and servicing work;
- faulty installation, commissioning, maintenance, servicing and cleaning;
- Use of incorrect operating materials, lubricants or spare parts;
- defective, incorrectly installed or dismantled protective devices;
- inadequate monitoring of components subject to wear;
- Use of externally procured equipment that has not been approved by the manufacturer;
- improper disassembly;

1.6 MODIFICATIONS AND CONVERSIONS

Modifications or conversions are prohibited without the written consent of the manufacturer and are therefore excluded.

NOTE
Description of the safety instructions in chapter 2.9

2 BASIC SAFETY INSTRUCTIONS

These operating instructions serve as a basis for the safe use and operation of the pump. The operating instructions, in particular the safety instructions and the rules and regulations applicable to the place of use, must be observed by all persons working on or with the pump.

Furthermore, the generally applicable legal and other rules and regulations for accident prevention (e.g. personal protective equipment) and environmental protection for the place of work must be followed.

NOTE

Some activities on the vacuum pump require compliance with special safety regulations. These safety instructions can be found in the respective chapters of these operating instructions.

NOTE

The operating instructions must always be kept at the place of use and be freely accessible to all persons with tasks on the vacuum pump.

The instructions of the occupational safety specialist and the instructions for action from the briefings must be followed without fail.

The pump is only intended for the intended use described in the chapter 2.5.

Use of the pump outside of its intended use is prohibited.

All work on the pump may only be carried out by qualified and trained personnel (see chapter 2.4).

For all activities on the pump, the safety instructions given in chapter 2.9 must be observed.

2.1 PROVISION

The pump is a machine in the sense of the Machinery Directive 2006/42/EC Art 2a. The pump conforms to the health and safety requirements of the Machinery Directive 2006/42/EC.

The pump may only be used after the operator has determined that the use of the pump is installed according to the state of the art.

This is fulfilled if, among other things, the operating conditions listed in these operating instructions have been fully implemented in accordance with Directive 2006/42/EC Annex 1 Para. 1.7.4.2.i.

2.2 OBLIGATIONS OF THE OPERATOR

The operator undertakes to only allow persons to work on the pump who are

- are familiar with the basic regulations of occupational safety and accident prevention;
- were instructed for the activities at the pump;
- have read and understood these operating instructions before carrying out any work on the pump;
- have reached the legal minimum age;
- are fit for health;
- are rested and not under the influence of drugs or medication;
- reliably perform the assigned work.

In addition, the operator must train the staff at regular intervals and inform them about the dangers.

The personnel of the operating company must be permanently committed to safe working practices and informed about the dangers and risks of the pump. This applies in particular to the safety instructions.

The operator must provide the personnel with the necessary protective equipment.

2.3 OBLIGATIONS OF THE STAFF

All persons entrusted with work on the pump undertake, before starting work, to

- observe the basic regulations on occupational safety and accident prevention and
- to read and observe these operating instructions

NOTE

Only persons who have read and understood these operating instructions may carry out activities on and with the pump!

2.4 STAFF QUALIFICATION

Certain activities require a specific qualification to be demonstrated by the personnel carrying them out. The following table summarises these qualifications:

Activity	People	
	Instructed persons with specialist training	Instructed operating personnel
Commissioning	x	
Maintenance & Servicing	x	
Disassembly	x	
Operation		x
Symbol "x" approved personnel		

Table 2.4: Staff qualification

2.5 INTENDED USE

The operational safety of the pump is only guaranteed if it is used as intended. Intended use also includes observing these operating instructions for this product and any components, as well as carrying out all maintenance and service work.

The pump may only be used as intended in accordance with the machine description and the technical data.

The intended use is summarised below:

- The pump evacuates air to a vacuum according to chapter 9.2
- The pumping of any other gases, especially hazardous substances, is not permitted and prohibited.
- The permissible technical parameters must be observed.
- The pump must not be operated in potentially explosive atmospheres.
- The pump must be protected from the weather.
- For any operation outside the technical parameters specified in the product data sheet, the manufacturer must be consulted.

ATTENTION

Only use the pump for its intended purpose and only use it if it is in perfect working order! This is the only way to ensure the operational safety of the pump!

2.6 INADMISSIBLE USE

- evacuating hazardous materials, especially flammable, explosive or toxic gases
- use in potentially explosive atmospheres (explosive gas/vapour/mist/air mixtures or dust/air mixtures or hybrid mixtures of air and flammable substances).
- the use of the pump in non-commercial applications
- the operation of the pump in an incompletely assembled state
- operation with back pressures on the outlet side above the permissible parameters according to the product data sheet (9.2)

2.7 PROTECTIVE MEASURES FOR USERS

When working on the pump, personal protective equipment must be worn to minimise health hazards.

The necessary protective equipment for the respective work must be worn at all times during work.

Personal protective equipment instructions posted in the work area must be followed.

WARNING

Risk of injury to hands due to crushing, cutting and high temperatures

During all work on the pump, hand protection must be worn in accordance with the glove schedule.

WARNING

Risk of injury to feet from crushing and falling objects

Foot protection must be worn during all activities at the pump.

WARNING

Hearing damage due to high volume

Hearing protection must be worn during activities that must be carried out while the pump is running.

Hand protection must be provided by the operator and must be suitable for the activities to be carried out and comply with the applicable standards (e.g. EN 388:2019-03).

Foot protection must be provided by the operator and must be suitable for the activities to be performed and comply with the applicable standards (e.g. DIN EN ISO 20345:2020-06).

Hearing protection must be provided by the operator and must be suitable for the noise levels generated and comply with the applicable standards (e.g. DIN EN 3527:2003-04).

2.8 INFORMATION ON RESIDUAL RISKS

The pump is built according to the current state of the art and the recognised safety regulations. When using the pump, health hazards for persons directly working with the pump and third parties cannot be excluded.

2.9 SAFETY INSTRUCTIONS

The hazards and risks in the respective phases of the pump's life are described below. The following hazard warnings must be observed.

DANGER

Danger to life due to electric shock / Personnel qualification

Work and tasks on the electrical system may only be carried out by qualified electricians who can prove that they have successfully completed a recognised training course in the relevant specialist field and have been instructed in the technical features of the pump.

The performance of electrical work, including the simplest auxiliary activities, is prohibited without exception for persons who do not fulfil the above conditions.

To perform tasks and activities on the pump's electrical system, work must be carried out in accordance with the five safety rules according to DIN VDE 0105.

DANGER

Danger to life due to electric shock / Measures in case of damage to the electrical installation

Damage to the electrical installation and contact with live parts can be life-threatening.

The following measures are therefore mandatory:

- In the event of damage to the electrical installation, switch off the pump immediately and notify the responsible office.
- A repair by a qualified electrician must be arranged.

DANGER

Danger to life due to unexpected start-up / countermeasures

The following steps are mandatory when preparing for maintenance and servicing activities:

1. Switch off the pump and all attached assemblies.
2. Disconnect the pump from the supply voltage and proceed according to the five safety rules (VDE105).
3. Disconnect the pump from the air supply.

DANGER

Fire and danger to life due to insufficient distances to neighbouring parts

If the pump is enclosed, minimum distances from the product must be maintained to prevent potential fires. Information on minimum distances can be found in the chapter 6.

DANGER

Danger to life due to arcing and creepage path formation when disconnecting plug connections

Always switch off the power supply before disconnecting any plug-in connections.

DANGER

Danger to life due to defective, dismantled and manipulated protective devices

The pump may only be operated if all safety and protective devices are fully present and functional!
Faulty safety and protective devices can lead to dangerous situations!
For this reason:

1. Switch off the pump immediately,
2. secure against restarting and
3. disconnect from air supply and electric current!

WARNING

Environmental hazards due to hazardous substances

The operating materials (especially oils) must not be disposed of in the environment. Disposal must comply with the requirements for the disposal of hazardous substances and the Waste Oil Ordinance (AltölV).

WARNING

Risk of injury from slipping, tripping and falling

The operator of the pump is responsible for traffic safety. If operating fluids escape from the pump, the areas must be cordoned off accordingly, marked and suitable measures taken.

WARNING

Risk of injury due to stored residual energies

The occurrence of mechanical, pneumatic and electrical residual energies on the pump after actuating the control element for stopping in an emergency or after switching off the pump must be observed!

WARNING

Danger from hot components and equipment

During operation, media and pump parts can reach high temperatures. Before intervening manually in the pump, it is therefore necessary to wait until it has cooled down enough to allow safe operation with protective gloves in order to avoid burns.

WARNING

Safety risk due to spare parts not approved by the manufacturer

Becker spare parts have been checked by us for their technical requirements and for their safety. Spare parts that have not been approved can pose a danger to people and the pump.

WARNING

Shutting down the pump when leaving the operating parameters

Outside the permitted operating parameters, safe operation of the pump can no longer be guaranteed. The limits of the permissible operating parameters are shown in the chapter 9.2.

WARNING

Risk of injury due to incorrect lifting conditions

If activities are carried out for assembly, the employee must be trained in the use of lifting equipment and have provided proof of this.
"The pump may only be lifted in accordance with the specifications (see chapter 5 ""Transport"")."

WARNING

Risk of injury! Danger of crushing in the hand and arm area due to product assembly.

If activities are carried out for assembly, the employee must be trained in the use of lifting equipment and have provided proof of this. Use suitable protective equipment!

CAUTION

Contamination and damage to the environment by operating materials

The operating materials used for the proper functioning of the pump and water contaminated with these operating materials can pose a danger to the environment.
To ensure rapid absorption of leaked operating materials and contaminated water, suitable absorbents must always be kept on hand
Used absorbents must always be disposed of according to the prescribed procedures.
All environmental protection regulations must always be observed when handling and disposing of operating materials.
Operating materials and contaminated water must be disposed of in accordance with the environmental protection conditions applicable on site.

NOTE

Wear safety shoes

Foot protection must be worn during all activities at the pump.

NOTE

Wear protective gloves

The pump must cool down until it is safe to carry out activities with protective gloves.

If this time cannot be guaranteed, protective gloves with adequate heat protection must be used. The exact model can be found in the operator's glove schedule.

NOTE

Wear chemical protective gloves

Caution: Danger of scalding from hot oil!

2.10 BEHAVIOUR IN CASE OF DANGER AND ACCIDENTS

The protective measures to be taken and the responsibility for drawing up an occupational safety concept lie with the operator of the workplace.

"The operator must ensure safe use by following the ""Operating conditions"" described in chapter 3."

2.11 REQUIREMENT FOR STABILITY

The pump must be installed horizontally on a flat surface.

If installed on an inclined plane, the oil circulation can no longer be guaranteed. This will cause damage to the pump.

2.12 OCCUPATIONAL SAFETY AND HEALTH

The pump has been set up in accordance with the Machinery Directive 2006/42/EC and the relevant occupational health and safety and accident prevention regulations. Before starting repair work, the pump must be de-energised and depressurised to prevent accidents. Previously dismantled protective devices must be reattached before commissioning.

2.13 AIRBORNE SOUND EMISSIONS

According to Directive 2006/42/EC, information on the airborne noise emission of the pump must be given. Exact details can be found in the Machinery Directive under point 1.7.4.2.

Notes on the pump (see chapter 9.2)

2.14 ERGONOMICS

"With regard to maintenance and servicing, special behaviour with regard to ergonomics, in accordance with Directive 2006/42/EC Annex i 1.1.6 ""Ergonomics"", must be taken into account:"

3 OPERATING CONDITIONS

The CE conformity of the product only becomes legally valid when all product safety requirements of the "operating conditions" formulated in this chapter in the sense of Directive 2006/42/EC Annex I 1.7.4.2.i have been fully implemented by the operator. Only in this case is CE conformity valid and the pump may be operated.

Operating condition 1: Safety instructions for maintenance work

1. **Standalone products - not implemented in a control system**

   In the event of maintenance, work must be carried out with the guards dismantled. This work may only be carried out when the pump is at a standstill. In order to ensure the safe standstill of the pump, the pump must be disconnected from the electrical supply and the five safety rules according to DIN VDE 0105 must be obligatorily observed.

   If the pump is implemented in a control system by the operator, the following conditions apply to the "Maintenance" operating mode:

2. **Or, in the case of a shutdown stored in the control system, comply with the requirements of DIN EN 61800-1:2018-11.**

Operating condition 2: Ventilation of the operating room

The operator must ensure that the operating room of the pump is sufficiently ventilated.

Operating condition 3: Approved equipment

The approved equipment is listed in chapter 9.3.

Operating condition 4: Electrical protection of the motor

The motor must be protected according to the state of the art. It must be protected at least by a suitable protective device in accordance with DIN EN 60204-1.

Operating condition 5: Ensuring cooling

The volume flow of the cooling must be guaranteed unhindered on the intake side as well as on the exhaust air side.

4 PUMP DESCRIPTION

This chapter explains the assemblies and components of the pump and how they work.

The following information is intended to help you understand how the pump works. This information can help to avoid dangers and errors due to incorrect operation.

4.1 GENERAL DESCRIPTION OF THE PUMP

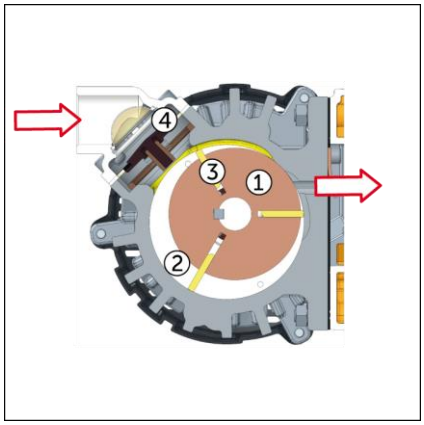

The pump is a classic oil-lubricated rotary vane vacuum pump.

It consists of a housing, the eccentrically installed rotor (1), the radially moving vanes (3) and the inlet and outlet.

There is a non-return valve (4) in the connection flange which is only open during operation.

When the rotor turns, gas flows into the enlarging chamber (2) until it is shut off by the next slide valve. The enclosed gas is then compressed until the outlet valve opens against atmospheric pressure. The vacuum created draws oil into the scoop chamber and, in addition to lubrication, also causes the slides to be sealed. The oil required for compression is then separated again via the air de-oiling elements.

4.2 SIZES

Several pumps of different sizes are listed in these operating instructions because they

- work according to the same principle of action,
- have the same intended use,
- are subject to the same legal and normative requirements,
- have a similar construction,
- have similar physical characteristics
- and are also very similar in terms of maintenance/service/commissioning.

4.3 VARIANTS

4.3.1 VARIANTS O 5.10-O 5.25

Within the O 5.10-O 5.25 series, 3 variants are distinguished.

- O 5.XX, with short oil tank
- O 5.XX, with oil tank
- O 5.XX XL K, with long oil tank + oil cooler

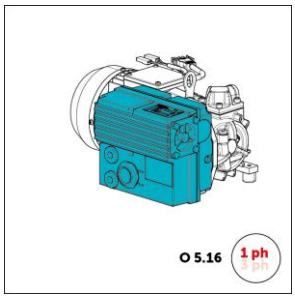

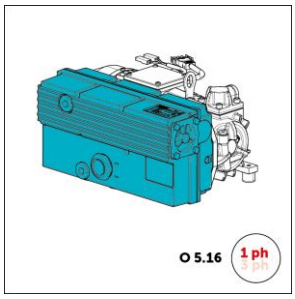

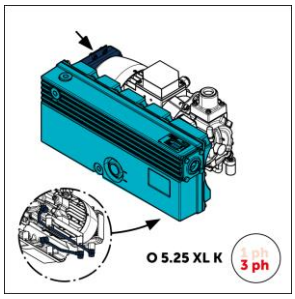

Due to the larger oil tank, there are longer maintenance intervals (see chapter 8.3).

4.3.2 VARIANTS U 5.40

Within the U 5.40 series, a distinction is made between 3 variants.

- U 5.XX, with oil tank
- U 5.XX XL, with long XL oil tank

- U 5.XX XL K, with long oil tank + oil cooler

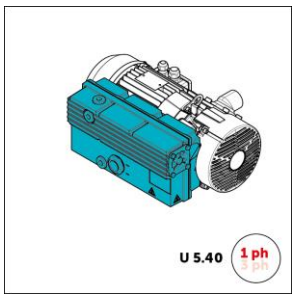

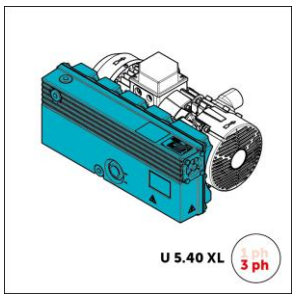

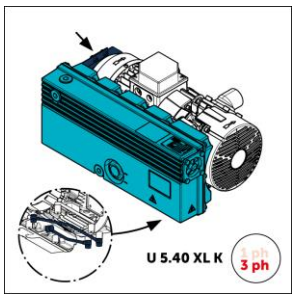

4.4 COMPONENT ILLUSTRATION

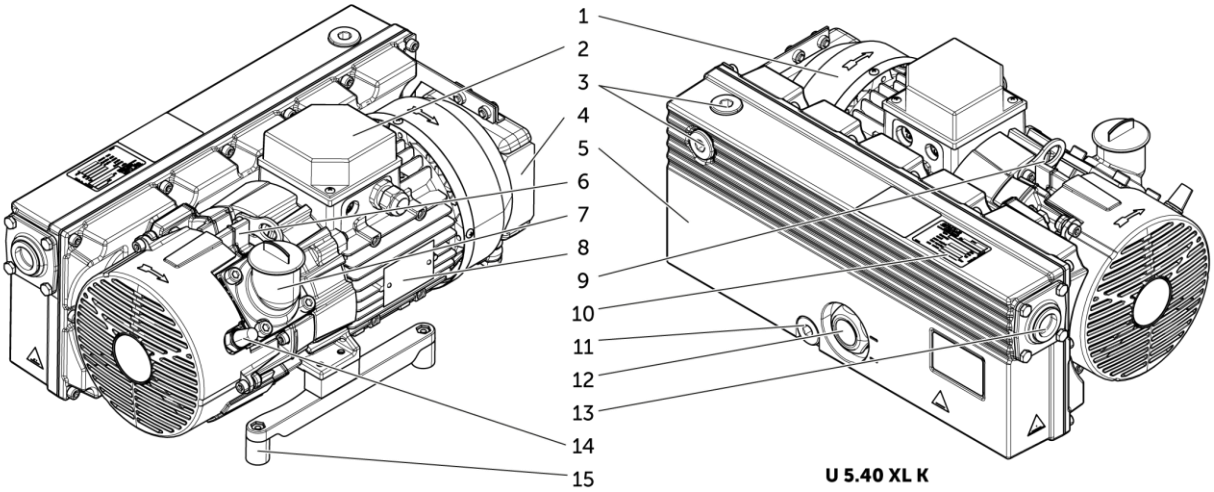

O 5.10, O 5.16, O 5.21, O 5.25, U 5.40, U 5.40 XL

Position	Component	Function
1	Motor	Drive
2	Terminal box	Electrical connection for customers
3	Screw plugs	Oil filler plug(s)
4	Oil cooler	Temperature reduction
5	Oil reservoir	Oil reservoir includes oil tank, oil filler plug, oil sight glass, oil drain plug and oil separator (air oil separator)
6	Pump unit	Generation of the vacuum; the pump unit includes pump housing, piston and slide valve
7	Connection flange incl. non-return valve	Suction connection, prevention of backflow of process air / oil into application
8	Motor nameplate	Marking of conformity and technical data - Motor
9	Transport device	Anchor point
10	Type shield	Marking of conformity and technical data - Pump
11	Screw plug	Oil drain plug
12	Oil sight glass	Oil level indicator
13	Maintenance cover	Gas outlet, access to air oil separator (optionally with exhaust air connection)
14	Gasballastventil	Improvement of the water vapour compatibility
15	Unit foot / rubber buffer	Stable installation and fastening of the pump

Table 4.4: Component illustration 1

4.5 MOTORS

The characteristics of the motor used can be found on the motor's type plate.

4.6 SAFETY AND PROTECTIVE DEVICES

DANGER

Danger to life due to defective, dismantled and manipulated protective devices

NOTE

For a description of the safety instructions, see chapter 2.9

The protective devices of the pump must not be dismantled, modified or put out of operation. If the protective devices are dismantled, modified or put out of operation, the pump must be shut down and secured immediately.

Defects in protective equipment must be rectified immediately. All protective equipment must be undamaged, fully assembled and in working order. Warning and information signs must be clearly visible.

All protective devices must be checked for functionality, damage and completeness after each maintenance of the pump.

If a maintenance activity requires the dismantling of protective devices, these may only be dismantled for the duration of the maintenance activity. All protective devices must be completely mounted in the designated place immediately after completion of the maintenance activities and checked for proper functioning.

The prescribed inspection intervals for protective devices must be observed and complied with. Protective devices may only be maintained, replaced and serviced by specially trained, instructed and authorised personnel.

Unauthorised tampering and manipulation with the safety-related parts of the pump are strictly prohibited and must be reported immediately to the responsible body.

All equipment serving safety and accident prevention, such as warning and information signs, covers, protective coverings, etc., must be in place. The removal or alteration of these facilities is prohibited. Damaged facilities must be repaired immediately.

Below is an overview of the pump with the designations of the protective devices.

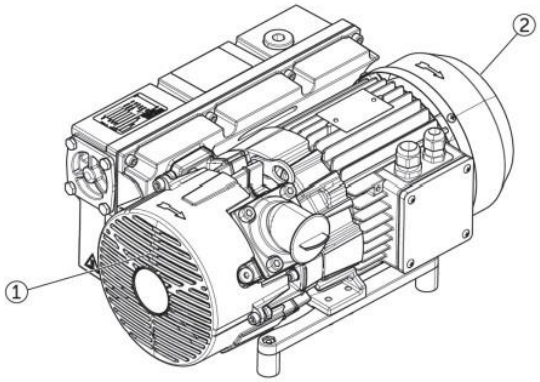

O 5.10, O 5.16, O 5.21, O 5.25, U 5.40

Position	Component	Location
1	Pump fan guard	Front of the unit
2	Motor fan cowl	Front side of the motor

Table 4.6: Safety and protective devices 1

4.7 TESTING THE SAFETY AND PROTECTIVE DEVICES

NOTE

All safety and protective devices must be checked regularly according to chapter 8.3.

The condition and function of safety and protective devices must be checked when:

- Modifications and repairs have been made to the pump
- Damage has occurred to the pump
- maintenance and servicing intervals are to be carried out.

4.8 OPERATING SUPPLIES AND CHEMICALS

CAUTION

Contamination and damage to the environment by operating materials

NOTE

Description of the safety instructions. See chapter 2.9

5 TRANSPORT

WARNING
Risk of injury due to incorrect lifting conditions.

NOTE
wear suitable PPE.

NOTE
For a detailed description of the safety instructions, see chapter 2.9

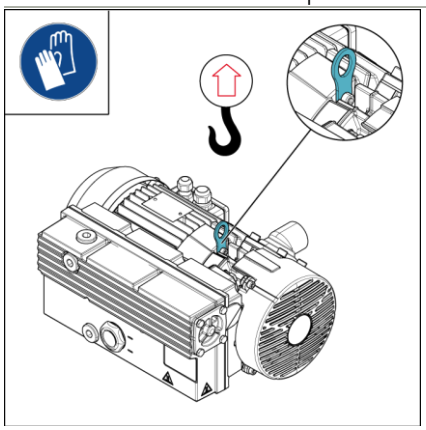

The pump may only be attached to the lifting eye. The following must be observed:

- Select lifting gear according to the total weight to be transported.
- Secure the pump against tipping and falling down.
- Always suspend the pump from all available load suspension devices.
- Do not stand under suspended loads.
- Place the goods to be transported on a horizontal surface (max. inclination: 10 ° in all directions).

6 INSTALLATION AND COMMISSIONING

6.1 GENERAL REQUIREMENTS

The installation site of the pump should be dry and protected from splash water.

We recommend installing the pump in such a way that maintenance work can be carried out easily. Depending on the type of variant or accessories fitted, additional free space may be required for this.

When assembling components and assemblies, the following points must be observed to avoid injury and damage to the pump:

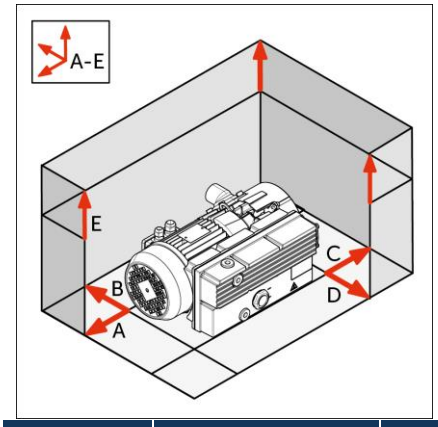

- Third-party components may only be installed if they have been approved by the manufacturer and comply with the directives and laws applicable in the country of use.
- Loose and non-pump parts must be removed from the pump environment after assembly.
- Protruding parts (pipes, cables, etc.) must be properly mounted, routed and marked.
- Contact points of components must be clean and intact.

Variant	O 5.10	O 5.16	O 5.21	O 5.25	U 5.40
A	100 mm	100 mm	100 mm	100 mm	100 mm
B	100 mm	100 mm	100 mm	100 mm	100 mm
C	100 mm	100 mm	100 mm	100 mm	100 mm
D	100 mm	100 mm	100 mm	100 mm	100 mm
E	100 mm	100 mm	100 mm	100 mm	100 mm

Table 6.1: Minimum distances

ATTENTION

Outside the permitted operating parameters, safe operation of the pump can no longer be guaranteed (for permitted operating parameters, see chapter 9.2).

The minimum distance of the pump to all neighbouring parts must be considered according to the following table. Failure to observe the minimum distances may result in a fire risk due to the high level of heat emitted. Take into account the distances for maintenance work.

NOTE

Fastening to the substrate

The pump can be installed on solid ground without anchoring. If the pump is to be installed on a substructure, it is recommended that it be fastened using elastic buffer elements.

6.2 PREPARATORY ACTIVITIES

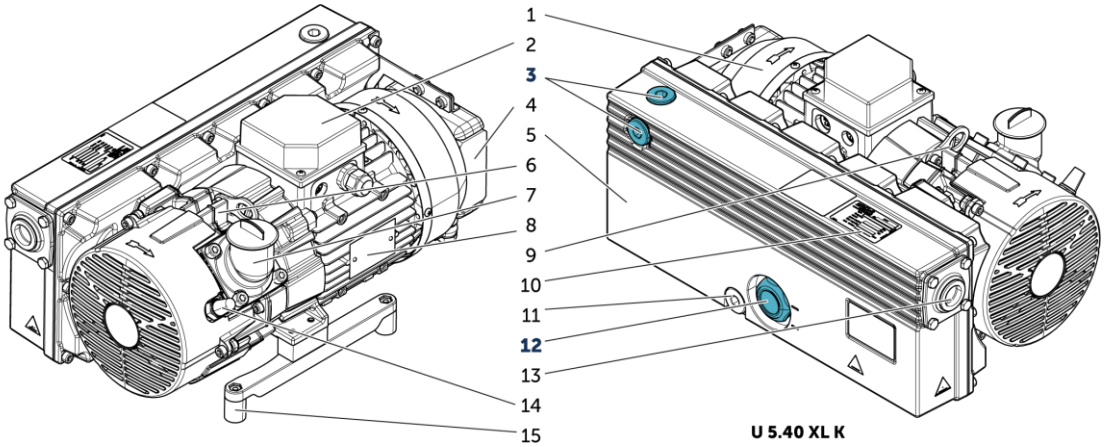

6.2.1 FILL IN OIL

ATTENTION

The pump is delivered without oil. Before commissioning, oil must first be filled in.

NOTE

For information on oil types and filling quantities, see chapter 9.3.

1. Unscrew the screw plug (Pos.3) at the top or side of the oil tank.
2. Fill in oil. The oil level must not exceed the max. filling level (upper filling line next to the oil sight glass (item 12)).
3. Close the screw plug again

6.2.2 CONNECTING THE MEDIA LINES

WARNING

When installing high temperature media lines, be sure to cover, insulate and label them appropriately to prevent injury and pump damage.

WARNING

Low residual amounts of oil in the exhaust air.

Ensure that the rooms are adequately ventilated to minimise any possible health risk to people.

ATTENTION

Penetration of foreign bodies or liquids

Depending on the application and the associated air quality, a fine or coarse filter must be connected upstream of the pump.

Remove sealing plug

The suction connection (Pos.7) is protected against the ingress of dirt and foreign bodies for transport with a sealing plug. This must be removed before commissioning.

Dimensioning the suction line

The diameter of the suction line depends on the pump size and the line length.

There is a female thread in the connection flange. Use cables with a diameter at least equal to the nominal connection diameter of the connection flange according to the following table.

Size	Connection
O 5.10	G 1/2 "
O 5.16	G 1/2 "
O 5.21	G 1/2 "
O 5.25	G 3/4 "
U 5.40	G 1 "

Table 6.2: Connection sizes (suction side)

The supply line must be installed by means of a flexible hose or fixed pipe in such a way that no mechanical tension is applied to it.

Exhaust air

The exhaust air is discharged via the maintenance cover.

A maintenance cover with integrated exhaust air flange (G ¾ internal thread) is optionally available for this purpose.

The discharge by means of a flexible hose or fixed pipe must be installed in such a way that no mechanical tension is applied to the pump.

It must be ensured that the exhaust air can flow out without major counterpressure (cf. chapter 2.6).

In case of high exhaust air temperatures, the exhaust air duct must be designed in such a way that it does not pose any danger.

6.3 ELECTRICAL INSTALLATION

DANGER
Danger to life from electric shock - Personnel qualification

DANGER
Danger to life due to defective, dismantled and manipulated protective devices

DANGER
Danger to life due to unexpected start-up

NOTE
For a description of the safety instructions, see Chap. 2.9

The electrical installation of the pump shall comply with the requirements of Directive 2006/42/EC and EN 60204:2019.

If the pump is integrated into a control system, it must be ensured that the pump does not restart automatically after an undesired voltage drop. The measures against unexpected start-up according to DIN EN ISO 14118:2018-07 must be implemented. This also applies after a shutdown following an emergency stop.

The following points must be observed when installing the pump:

- The pump may be operated with a maximum of 60 start/stop cycles per hour.
- The supply line of the pump must meet the minimum requirements of the state of the art

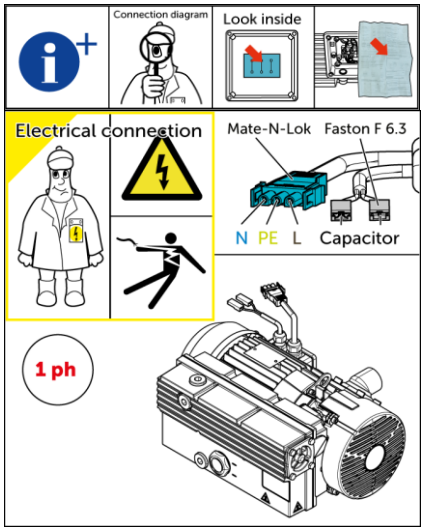

The following points must be observed when installing the pump:

The permissible connection types of the motor can be found on the motor type plate.

Connecting the 3~motor

- The motor must be connected according to the connection diagram (see terminal box cover or instruction leaflet in the terminal box).
- The following points must be observed when installing the pump:

The permissible connection types of the motor can be found on the motor type plate.

The pump must be protected by an overload protection (motor protection switch). Operation without appropriate fuse protection is prohibited.

Connecting the 1~motor (O 5.10-O 5.25)

The motor is to be connected according to the adjacent diagram.

Connecting the 1~motor (U 5.40)

- The motor must be connected according to the connection diagram (see terminal box cover or instruction leaflet in the terminal box).

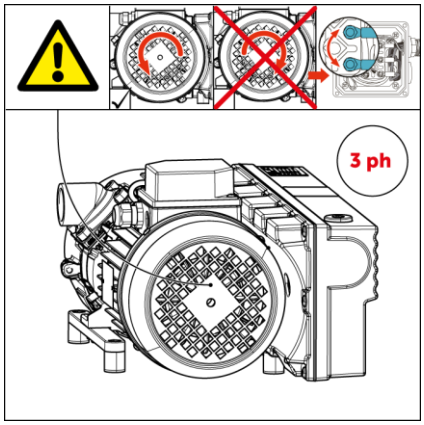

Approved direction of rotation of the pump

Before commissioning, check whether the pump is rotating in the prescribed direction. To do this, start the pump only briefly (max. 3 sec.), as operation with the wrong direction of rotation will cause damage to the pump.

If the pump does not run in the specified direction of rotation (view of the motor fan wheel), this must be changed by swapping two connection phases.

6.4 SWITCH ON PUMP

The pump is switched on via switching elements in the application. After switching on, the pump goes directly into normal operating mode. There are no subordinate operating modes for setup, maintenance or troubleshooting.

The pump must not be switched on until it has been properly set up, the electrical installation has been properly installed and the media lines have been connected.

6.5 NORMAL OPERATION

In normal operation, the pump operates fully automatically within its physical limits, according to the customer's control.

6.6 SWITCH OFF PUMP

1. Shutdown

   To switch off, the pump must be shut down from the application and secured against being switched on again. In addition, a warning sign must be attached to the mains disconnection device.

   All electrical equipment must be individually disconnected. Maintenance and servicing activities are strictly prohibited during operation or when the pump is switched on.

2. Disconnection from the power supply

   A verifiably qualified electrician switches the motor free and disconnects it. After carrying out the 5 safety rules, non-qualified electricians may also carry out activities on the pump.

After completing the activities, follow the instructions in the chapter 6.7.

6.7 RECOMMISSIONING

After the storage and shutdown period, the pump must be checked to ensure that it is in working order. In case of non-operational capability, appropriate maintenance and servicing measures are to be carried out in order to restore operational capability.

The following points must be worked through in the specified order to enable safe recommissioning of the pump:

1. The pump must be maintained, cleaned and, if necessary, repaired on the basis of the chapters 8.1 and 8.9.
2. The electrical connection must be carried out according to chapter 6.3. The power supply must not yet be restored.
3. All safety devices must be mounted and checked for functionality and effectiveness. Damaged parts must be replaced immediately

"After completing the previously mentioned points and taking into account the chapter ""Switching on the pump"" see chapter 6.4, the pump can be put back into operation."

7 TROUBLESHOOTING / TROUBLESHOOTING

DANGER
Danger to life from electric shock - Personnel qualification

DANGER
Danger to life due to defective, dismantled and manipulated protective devices

DANGER
Danger to life due to unexpected start-up

WARNING
Risk of injury due to slipping, stumbling

NOTE
For a description of the safety instructions, see chapter 2.9

NOTE
Visual inspection: The pump is free of foreign objects. After initial inspection, the pump is in a damage-free condition. This also includes checking the electrical and pneumatic components and connections.

- Expel unauthorised persons from the pump
- Check the levels of lubricants and auxiliary materials.

If troubleshooting is carried out immediately after operation, ensure that there is sufficient cooling time.

Pump troubleshooting is only allowed under the following conditions:

Shutdown

For troubleshooting, the pump must be shut down and secured against being switched on again. In addition, a warning sign must be attached to the mains disconnection device.

All existing electrical equipment must be disconnected individually.

If safety devices have to be dismantled or modified for troubleshooting, they must be reattached, adjusted and tested after completion of the maintenance and servicing activities and before starting the pump.

After that, a verifiably qualified electrician may carry out activities on the pump.

After completion of the activities, the pump may be put back into operation after a visual inspection.

When troubleshooting, check the pump in particular for defects.

- Damage, especially to:
  - Ventilation grilles
  - Screw fittings
  - Media lines
  - Electrical lines
- Leaks
- Loose objects
- Loose screw connections or fastenings
- Contact protection on live parts

If defects and hazards become visible during the inspection, the pump must be shut down immediately. The pump may only be put into operation if it is in perfect condition.

After completion of the activities, follow the procedure according to the point: "Recommissioning".

The chapter 8.1 must be followed.

7.1 FAULT TABLES

The following tables describe possible causes of malfunctions and the steps to be taken to eliminate them. In the event of faults that cannot be remedied by following the instructions below, please contact Gebr.

The pump does not reach the required vacuum		
Cause	Review	Troubleshooting
Leakage in the supply line	Visual inspection of the supply line elements (e.g. piping, fitting, hose clamps)	Replacing the faulty supply line elements
Strainer in the intake manifold is clogged	Check the strainer for dirt If this occurs repeatedly, check the intake line for dirt if necessary.	Clean / replace sieve
Resistance in the supply line too high	Check the dimensioning of the supply line	Carry out dimensioning according to operating instructions Further support from BECKER Service
Resistance in the supply line too high	Check supply lines for blockages, kinks and deformations.	Remove foreign bodies from the media line. Repair supply lines if necessary
Resistance in the supply line too high	Check throttle elements for opening condition	Open throttle elements if necessary
The motor runs in the wrong direction of rotation if the pump does not prime correctly and emits loud noise.	Check the direction of rotation using the direction of rotation arrow.	The motor installation must be corrected by a qualified electrician.
Oil level not sufficient	Visual inspection of the oil sight glass during pump standstill	The oil recommended by the manufacturer must be adjusted to the correct level.
Water/condensate in the oil	Check oil for condensate residues	Change the oil.

Table 7.1: Fault tables 1

The pump does not start		
Cause	Review	Troubleshooting
Supply voltage is not present	Check electrical protection devices (e.g. motor protection switch, fuses, emergency stop).	Remedy the identified fault by a qualified electrician
Supply voltage is not present	Check electrical connection cable	Repairing the connection line
Supply voltage is not present	Check electrical connection	Have the identified fault rectified by a qualified electrician
Pump mechanically blocked	Exclude electrical causes; check free movement on the motor fan (with a screwdriver).	Contact BECKER service

Table 7.1: Fault tables 2

The pump becomes unusually hot		
Cause	Review	Troubleshooting
Motor/unit fan damaged or clogged	Visual inspection for visual damage; listen for unusual noises (e.g. grinding noises).	The pump must be shut down safely or disconnected from the power supply by a qualified electrician. The protective device "fan guard" must be removed and the fan wheel must be cleaned of dirt or replaced in case of damage.
Air oil separator element clogged	If an optional maintenance indicator is installed, a blockage can be detected during operation due to the increased back pressure.	The pump must be shut down safely or disconnected from the power supply by a qualified electrician. The air oil separator must be replaced at the specified interval.
Strainer in the intake manifold is clogged	Check the strainer for contamination; if this occurs repeatedly, check the intake line for contamination if necessary.	Clean / replace sieve
Temperature of the evacuated gas is too high	Measure the temperature of the evacuated gas and compare it with the permitted maximum temperature (chapter <k>Betriebsparameter</k>).	This temperature limit must be observed.
Ambient temperature of the pump is too high	Measure ambient temperature	Sufficient ventilation and compliance with the minimum distances must be checked and ensured.

Table 7.1: Fault tables 3

8 MAINTENANCE, SERVICING AND DISMANTLING

DANGER
Danger to life due to defective, dismantled and manipulated protective devices

DANGER
Danger to life due to electric shock

WARNING
Danger from hot components and equipment

CAUTION
Contamination and damage to the environment by operating materials

NOTE
Wear suitable PPE

NOTE
For a description of the safety instructions, see 2.9

If a maintenance activity requires the dismantling of protective devices, these may only be dismantled for the duration of the maintenance activity. Immediately after completion of the maintenance work, all guards must be completely installed in the designated place and checked for proper functioning. The prescribed test intervals for protective devices must be observed and complied with. Protective devices may only be maintained, replaced and serviced by specially trained, instructed and authorised personnel.

Safety-related parts of the pump could be damaged or disabled by unauthorised tampering and manipulation. Unauthorised tampering and manipulation of the safety-related parts of the vacuum pump, adjustable components, is strictly prohibited and must be reported immediately to the responsible body.

8.1 MAINTENANCE AND SERVICING

As a prerequisite for safe and proper operation, it is essential that the pump is serviced and maintained at regular intervals by appropriately qualified personnel. In addition, regular maintenance and servicing increases availability and extends the service life of the pump. The recommended maintenance and servicing intervals are listed in this chapter.

8.2 PREPARATION

The responsibilities for installation, operation, maintenance and cleaning must be clearly regulated and defined.

For maintenance and servicing measures, it must be ensured that sufficient space is available for all work. The maintenance area must be secured.

The following steps must be followed when preparing for maintenance and servicing activities:

1. All existing electrical equipment must be individually disconnected. Maintenance during operation or when the pump is switched on is strictly prohibited.
2. If safety devices have to be dismantled or modified, they must be refitted, adjusted and tested immediately after completion of the maintenance and servicing activities and before the pump is started.
3. After that, a verifiably qualified electrician may carry out activities on the pump, taking into account the 5 safety rules.

After completion of the activities, the pump may be put back into operation after a visual inspection.

8.3 MAINTENANCE INTERVALS

The following overview shows the maintenance intervals:

NOTE

First oil change / oil filter change after 500 operating hours. Thereafter as indicated in the maintenance table.

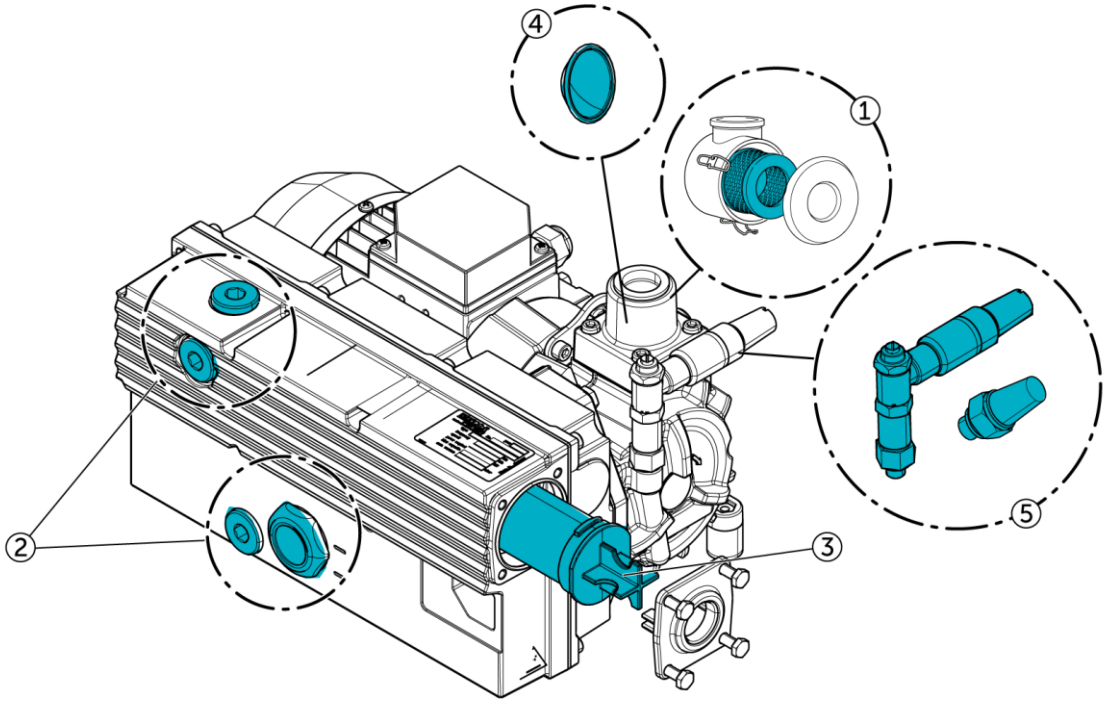

O 5.10, O 5.16, O 5.21, O 5.25, U 5.40

Component	40 h	40 - 200 h	1500 h (min. 2x/1a)	6000 h	20000 h (min. 1x/5a)
Intake filter (1)		(switch), check, clean			
Suction strainer (4)			clean		
Gas ballast valve filter (5)				change	
Housing		clean			
General overhaul					execute
Air Effluent Element (LEE) (3)			change		
Protective devices		Visual inspection			
Oil (2)	Check level		change		

Table 8.3: Maintenance intervals 1

O 5.10 XL, O 5.16 XL, O 5.21 XL, O 5.25 XL, U 5.40 XL

Component	40 h	40 - 200 h	2000 h (min. 2x/1a)	6000 h	20000 h (min. 1x/5a)
Intake filter (1)		(switch), check, clean			
Suction strainer (4)			clean		
Gas ballast valve filter (5)				change	
Housing		clean			
General overhaul					execute
Air Effluent Element (LEE) (3)			change		
Protective devices		Visual inspection			
Oil (2)	Check level		change		

Table 8.3: Maintenance intervals 2

O 5.25 XL K, U 5.40 XL K

Component	40 h	40 - 200 h	2000 h (min. 2x/1a)	6000 h	20000 h (min. 1x/5a)
Intake filter (1)		(switch), check, clean			
Suction strainer (4)			clean		
Gas ballast valve filter (5)				change	
Housing		clean			
General overhaul					execute
Air Effluent Element (LEE) (3)			change		
Protective devices		Visual inspection			
Oil (2)	Check level		change		
Oil cooler		Clean outside			

Table 8.3: Maintenance intervals 3

8.4 MAINTENANCE ACTIVITIES

DANGER
Danger to life due to defective, dismantled and manipulated protective devices

WARNING
Danger from hot components and equipment

CAUTION
Contamination and damage to the environment by operating materials

NOTE
Wear suitable PPE

NOTE
For a description of the safety instructions, see 2.9

The safety instructions must be observed:

- Use appropriate tools and handle with care.

- Personal protective equipment must be used to prevent injury from tools or components.
- The maintenance area must be kept clean and tidy. Objects lying around can be a tripping hazard
- If there is any uncertainty, consult the supervisor or the manufacturer.

The maintenance plan provides for the following activities:

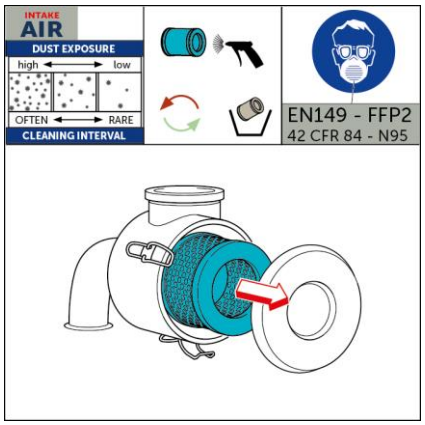

Clean the intake filter (optional)

Depending on the degree of contamination of the intake air, the pre-filter becomes clogged. It must be cleaned by compressed air at the intervals shown opposite, but at least every 200 hours.

If the filter's function is restricted (stuck or damaged) even after the cleaning process, it must be replaced.

Only use original spare parts from the manufacturer.

For cleaning the filter cartridge, proceed as follows, depending on the installation:

1. paper filter cartridge

- Blow through with compressed air from the inside to the outside. Make sure that there is sufficient distance, as too hard an air flow can damage the filter material.

2. polyester filter cartridge

- First free the filter from coarse dirt by lightly tapping it out.
- Rinse the filter carefully with a not too hard water jet from the inside to the outside. For stubborn dirt, it is recommended to soak the filter in a mild soap-based cleaning bath.
- Shake the excess water out of the filter and let it dry out completely in the air. When drying with compressed air, make sure there is sufficient distance, as too hard an air flow can damage the filter material.

ATTENTION

- Always allow polyester filters to dry after cleaning with water. - Danger of adhesion or mould!
- Water in the pump leads to contamination of the oil, and there is also a risk of corrosion!

NOTE

External filters are available in many sizes and designs. For further information, please contact BECKER Service

If the filter's function is restricted (clogged, oily, greasy or damaged) even after the cleaning process, it must be replaced. Replacement should take place after one year at the latest

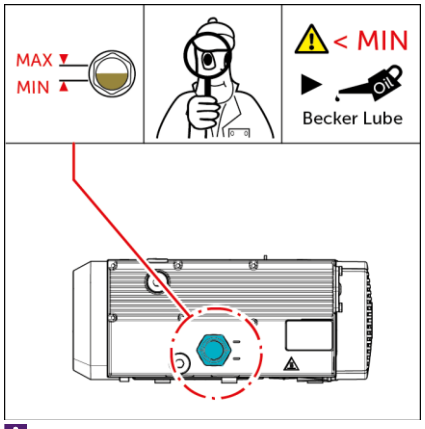

Check oil level

The oil level can be read off the oil sight glass after an appropriate waiting time, in a shut-down state and ventilation to atmospheric pressure.

The oil lubricates the rotary vane in the compressor chamber. The thermal energy released in the process causes the oil to evaporate into oil mist. Despite the use of an air-oil separator (LEE), small amounts of oil mist are pumped out of the pump. Therefore, the oil level must be checked regularly and adjusted if necessary.

For information on oil types and filling quantities, see chapter 9.3

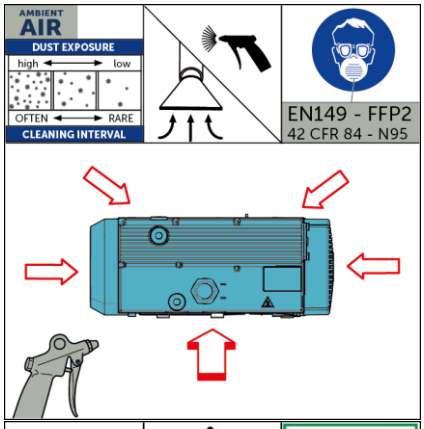

Clean surface with compressed air

The pump must be cleaned regularly. The interval depends on the degree of contamination on the casing.

During cleaning, protective goggles and an FFP2 mask according to EN 149:2008 must be worn.

Clean oil cooler (XL K variant)

Do not remove dirt from the cooling fins with compressed air, but preferably with the help of a vacuum cleaner.

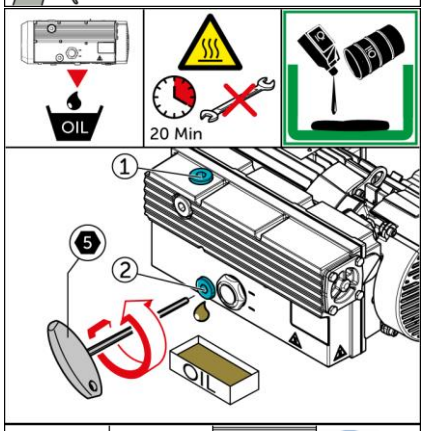

Oil change

The oil seals the pump and improves the running characteristics. The use of the oil in the compressor chamber results in direct contact with the process gas. This contaminates the oil. The pump can no longer achieve the required performance characteristics. The oil must therefore be changed at regular intervals (depending on the pump type).

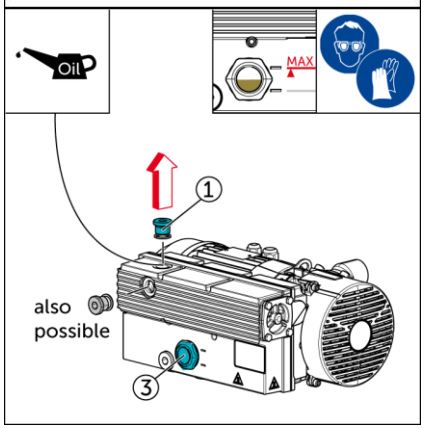

1. Ensure that all prerequisites for maintenance operation have been met.
2. Place a container underneath to collect the waste oil.
3. Open the oil filler plug (pos. 1) to vent the oil.
4. Open the oil drain plug (pos. 2) and fill the used oil into the container.
5. Close oil drain plug
6. Fill with new oil
7. The oil level must not exceed the max. level (marking on the oil sight glass (pos. 3)).
8. Close oil filler plug
9. Dispose of used oil properly in accordance with national regulations for the disposal of hazardous goods.

First oil change after 500 operating hours Notes on further intervals -> 8.3

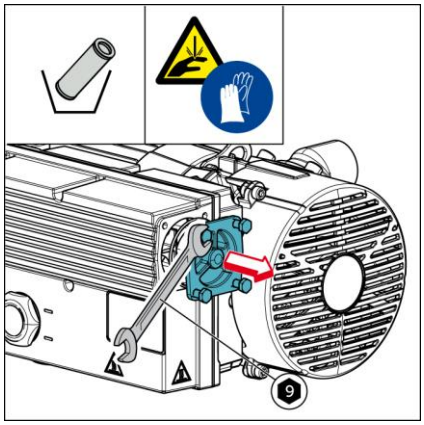

Change air oil separator

The air oil separator cleans the process gas flowing through the pump. It mainly separates the oil that the process gas has absorbed in the compressor chamber as oil mist. With increasing operating time, the air de-oiling element becomes saturated with oil, the filter resistance increases and pump failures can be the result.

The air oil separator must be replaced at intervals depending on the pump type (see table 8.3).

1. Ensure that all prerequisites for maintenance operation have been met.
2. Loosen the 4 screws and remove the maintenance cover
3. Turn the air separator element by 90° to release the lock
4. Remove / replace air oil separator
5. Install the air oil separator in reverse order.
6. Properly dispose of the air oil separator in accordance with the national regulations for the disposal of hazardous materials.

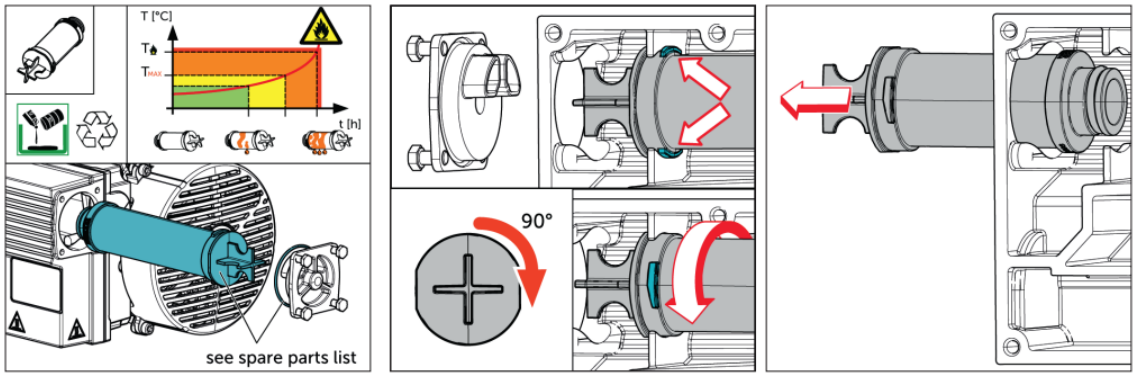

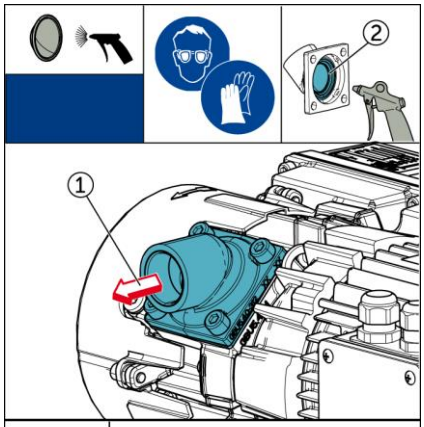

Clean suction strainer

To prevent larger foreign bodies from getting inside the pump, a suction strainer is installed in the connection flange.

The sieve must be cleaned at the specified interval (see table).

1. Ensure that all prerequisites for maintenance operation have been met.
2. Loosen the 4 screws on the connection flange and remove the flange (1).
3. Clean flange with suction strainer from inside to outside with compressed air (2)
4. Refit the intake flange

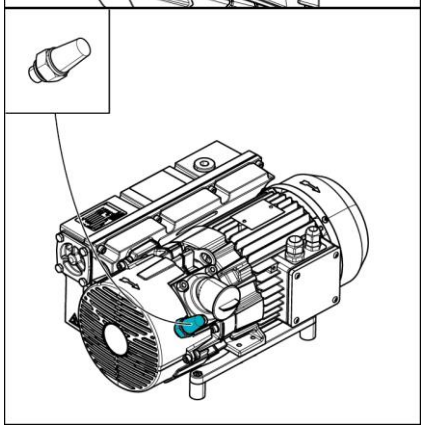

Change gas ballast valve filter

The gas ballast valve filter must be changed according to the interval, otherwise the water vapour capacity of the pump is reduced and proper operation is no longer guaranteed.

8.5 MEDIA LINES

WARNING

Risk of injury due to stored residual energies

Lines, hoses, pipes, valves and connections must be checked for damage (leaks) at regular intervals.

It is essential to observe the following instructions when carrying out maintenance and servicing work on media lines:

- Before starting work on media lines, the system must be depressurised and secured against being switched on again. Residual energy must be dissipated or discharged. Residual liquids in media lines must be drained off

8.6 CONDITIONS FOR RECONNECTION

Before restarting after maintenance and servicing activities, the following points must be observed:

- Unauthorised persons are to be expelled from the pump.
- Check for proper connection between the pump and the media lines.
- The media lines must be checked for leaks and damage.
- The power supply must be checked for damage and proper functioning.
- All operating materials must have a proper fill level.
- All protective devices must be present, functional and tested.

8.7 SPARE AND WEAR PARTS

WARNING

Safety risk due to spare parts not approved by the manufacturer

A comprehensive spare parts list with all spare and wear parts of the series listed here can be found on our homepage under the following link:

www.becker-international-shop.com

8.8 TEMPORARY DECOMMISSIONING

The following steps must be observed in the event of temporary decommissioning:

1. Shutdown
2. To switch off, the pump must be shut down and secured against being switched on again. In addition, a warning sign must be attached to the mains disconnection device.
3. All existing electrical equipment must be disconnected individually.
4. Disconnection from the power supply
5. A verifiably qualified electrician switches the motor free and disconnects it. After carrying out the 5 safety rules, non-qualified electricians may also carry out activities on the pump.
6. After completion of the decommissioning, the activities under the item: "Recommissioning" must be followed.

8.9 CLEANING

DANGER

Danger to life due to unexpected start-up

DANGER

Danger to life due to defective, dismantled and manipulated protective devices

WARNING

Risk of injury from slipping, tripping and falling

WARNING

Danger from hot components and equipment

CAUTION

Contamination and damage to the environment by operating materials

ATTENTION

Incorrectly executed cleaning and the use of incorrect cleaning agents or cleaning equipment (e.g. high-pressure cleaners) can cause damage to the pump.

NOTE
wear suitable PPE.

NOTE
For a description of the safety instructions, see chapter 2.9

The entire pump must be cleaned at regular intervals depending on the amount of dust. This includes cleaning all surfaces of the pump with a compressed air gun and moistened cleaning cloth.

The cleaning instructions of the manufacturers of components and assemblies are to be observed

The use of solvents or cleaning agents containing solvents is prohibited.

The use of cleaning agents that are highly flammable or generally flammable is prohibited!

The legal regulations for environmental protection must be observed during cleaning.

Restarting the pump is only permitted if there is no damage to the pump and no person is exposed to danger.

8.10 DISMANTLING AND DECOMMISSIONING

DANGER
Danger to life due to unexpected start-up

DANGER
Danger to life from electric shock - Personnel qualification

WARNING
Risk of injury from slipping, tripping and falling

WARNING
Danger from hot components and equipment

CAUTION
Contamination and damage to the environment by operating materials

NOTE
wear suitable PPE.

NOTE
For a description of the safety instructions, see chapter 2.9

The following steps must be observed during dismantling and decommissioning:

1. Switch off the pump and release the drive.
2. Switch off the power supply and secure it against being switched on again unintentionally.
3. Disconnect the supply line of the drive.
4. Shut off media lines and divert pressure differences if necessary.
5. Disconnect the media lines from the pump.
6. Disassemble the pump in reverse order of assembly or according to separate disassembly instructions. Loose parts must be secured to prevent them from tipping over or falling down.
7. Protect the pump from further contamination
8. Clean the pump thoroughly and remove operating materials
9. Dispose of operating materials in accordance with the applicable local regulations.

8.11 STORAGE

The following requirements for the storage location must be observed during storage in order to store the unused pump in a proper condition over a longer period of time. If the following requirements are not observed, damage to the pump may occur. Storage is recommended without oil filling. The storage location must be

- the storage place must be dry and clean
- the storage place must be level
- the storage place must be protected from sudden changes in temperature and humidity
- the storage location must be protected from salt spray, industrial gases, corrosive liquids, rodents and fungal attack

8.12 DISPOSAL

CAUTION
Contamination and damage to the environment by operating materials

NOTE

For a description of the safety instructions, see chapter 2.9

Disposal of the pump takes place in the dismantled state. See chapter 8.10

When disposing of the pump, the relevant local statutory environmental regulations for environmental protection must be observed.

9 PRODUCT DATA SHEET

9.1 PRODUCT OVERVIEW

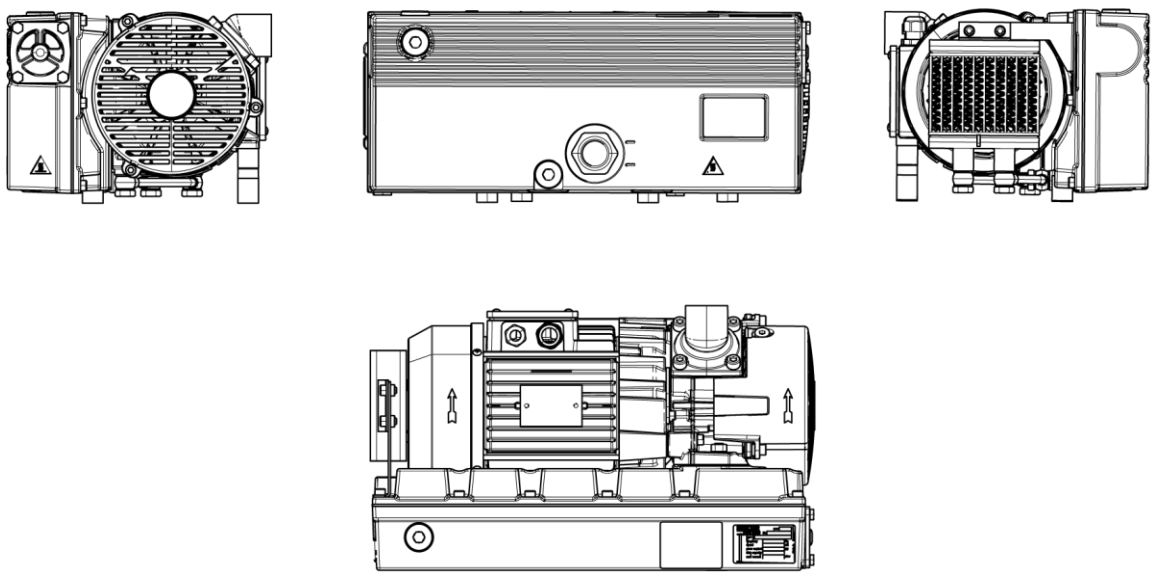

Example: U 5.40 XL K

9.2 OPERATING PARAMETERS

Variant	O 5.10	O 5.16	O 5.21	O 5.25
Volume flow 1 max.	10,5 m^3/h (50 Hz)	16 m^3/h (50 Hz)	23,5 m^3/h (50 Hz)	26 m^3/h (50 Hz)
Volume flow 2 max.	12,5 m^3/h (60 Hz)	19 m^3/h (60 Hz)	27 m^3/h (60 Hz)	30 m^3/h (60 Hz)
Vacuum	2 mbar (abs)	2 mbar (abs)	2 mbar (abs)	2 mbar (abs)
Weight	17 - 18,5 kg	18 - 19,5 kg	20 - 21,5 kg	20 - 21,5 kg
Sound level 1 max.	58,5 dB(A) (50 Hz)	60,5 dB(A) (50 Hz)	64 dB(A) (50 Hz)	63 dB(A) (50 Hz)
Sound level 2 max.	64 dB(A) (60 Hz)	67 dB(A) (60 Hz)	69 dB(A) (60 Hz)	66 dB(A) (60 Hz)
Permissible ambient temperature	5 - 45 °C	5 - 45 °C	5 - 45 °C	5 - 45 °C
Exhaust air temperature max.	68 °C	78 °C	82 °C	92 °C
Maximum installation height	800 m ü.NN.	800 m ü.NN.	800 m ü.NN.	800 m ü.NN.
Maximum humidity of the intake air	90 %	90 %	90 %	90 %

Table 9.2: Operating parameters

Variant	O 5.25 XL K	U 5.40	U 5.40 XL	U 5.40 XL K
Volume flow 1 max.	26 m^3/h (50 Hz)	40 m^3/h (50 Hz)	40 m^3/h (50 Hz)	40 m^3/h (50 Hz)
Volume flow 2 max.	30 m^3/h (60 Hz)	48 m^3/h (60 Hz)	48 m^3/h (60 Hz)	48 m^3/h (60 Hz)
Vacuum	2 mbar (abs)	1 mbar (abs)	1 mbar (abs)	1 mbar (abs)
Weight	24,5 kg	25 - 26,5 kg	26,3 - 27,8 kg	27 - 28,5 kg
Sound level 1 max.	63 dB(A) (50 Hz)	64 dB(A) (50 Hz)	67 dB(A) (50 Hz)	67 dB(A) (50 Hz)
Sound level 2 max.	63 dB(A) (60 Hz)	67 dB(A) (60 Hz)	61 dB(A) (60 Hz)	61 dB(A) (60 Hz)
Permissible ambient temperature	5 - 45 °C	5 - 40 °C	5 - 40 °C	5 - 40 °C
Exhaust air temperature max.	63 °C	66 °C	66 °C	50 °C
Maximum installation height	800 m ü.NN.	800 m ü.NN.	800 m ü.NN.	800 m ü.NN.
Maximum humidity of the intake air	90 %	90 %	90 %	90 %

Table 9.2: Operating parameters

NOTE

Cyclic pumping out

For the U 5.40 and the U 5.40 XL, a maximum chamber volume of 150 litres must be observed in cycle operation to avoid damage to the pump.

The U 5.40 XL K is not affected by this restriction.

Continuous operation

The following pressure ranges are approved for continuous operation.

U 5.40 and U 5.40 XL -> 1-100 mbar (abs.)

U 5.40 XL K -> 1-300 mbar (abs.)

O 5.10 - O 5.25, O 5.25 XL K -> 2-300 mbar (abs.)

9.3 OPERATING SUPPLIES

ATTENTION

For pumps with 1~ motors, the following oils of viscosity class ISO-VG 32 must be used.

NOTE

Pumps used in the food industry require special oils.
Marked as H1 pump oils in the list below.

- SM oils (application - food processing)
- SL oils (application - food packaging)

Pump oils				
Resources	Art	Intended use	Container size	Order number
Becker Lube M 32	Mineral oil	General	0,25 l	96001700025
Becker Lube M 68	Mineral oil	General	1 l	96002300300
Becker Lube M 68	Mineral oil	General	5 l	96002300400
Becker Lube S 32	Synthetic oil	General	0,25 l	96000320025
Becker Lube S 32	Synthetic oil	General	0,5 l	96000320050
Becker Lube S 68	Synthetic oil	General	1 l	96002300700
Becker Lube S 68	Synthetic oil	General	5 l	96002300600
Becker Lube SL 32	H1 pump oil	Food packaging	1 l	96002300901
Becker Lube SL 68	H1 pump oil	Food packaging	1 l	96002300701
Becker Lube SL 68	H1 pump oil	Food packaging	5 l	96002300801
Becker Lube SM 32	H1 pump oil	Food processing	1 l	96003700501
Becker Lube SM 68	H1 pump oil	Food processing	1 l	96002300500
Becker Lube SM 68	H1 pump oil	Food processing	5 l	96002300600

Table 9.3: Resources

Pump	Oil quantity
O 5.10	0,3 l
O 5.10 XL	0,5 l
O 5.16	0,3 l
O 5.16 XL	0,5 l
O 5.21	0,3 l
O 5.21 XL	0,5 l
O 5.25	0,3 l
O 5.25 XL	0,5 l
O 5.25 XL K	1 l
U 5.40	0,5 l
U 5.40 XL	1 l
U 5.40 XL K	1 l

Table 9.3: Oil filling quantities

9.4 TECHNICAL DATA

Technical data sheets for the pumps as well as safety data sheets for the oils can be found on our homepage under the following link:

www.becker-international.com/download

MAKE IT BECKER.

28200000800 | 2023-07-13 | All rights reserved