TRANSLATION OF THE OPERATING INSTRUCTIONS

BCV 100/150/300/400/500
VARIAIR (BCV 100/150/300)
BCV 400/500 FD
CLAW
VACUUM PUMPS

Dry-running and contactless

MAKE IT BECKER.

Instructions also for devices with

VARIAIR UNIT

BECKER

Important information for the user of the operating instructions

We reserve the right to make technical changes and additions to the operating instructions.

No liability is assumed for the content, in particular for damage caused by existing, non-existent or incorrect information.

The distribution of these operating instructions is not permitted unless expressly authorised.

Operating instructions valid for:

General designation	Claw vacuum pump, described below as the "pump".
Product type	Dry-running and contactless
Model	BCV 100/150/300/400/500 VARIAIR (BCV 100/150/300) BCV 400/500 FD
Manufacturer	**Gebr. Becker GmbH** Hölker Feld 29-31 42279 Wuppertal

Contents

1 TO THE OPERATING INSTRUCTIONS 4

1.1 GENERAL INFORMATION 4

1.2 STRUCTURE OF THE SAFETY INSTRUCTIONS 4

1.3 SAFETY SYMBOLS 4

1.4 ADDITIONAL DOCUMENTATION 5

1.5 WARRANTY AND LIABILITY 5

1.6 MODIFICATIONS AND CONVERSIONS 5

2 BASIC SAFETY INSTRUCTIONS 6

2.1 PROVISION 6

2.2 OBLIGATIONS OF THE OPERATOR 6

2.3 OBLIGATIONS OF THE STAFF 6

2.4 PERSONNEL QUALIFICATION 7

2.5 INTENDED USE 7

2.6 UNAUTHORISED USE 7

2.7 PROTECTIVE MEASURES FOR USERS 7

2.8 INFORMATION ON RESIDUAL RISKS 8

2.9 SAFETY INSTRUCTIONS 8

2.10 BEHAVIOUR IN THE EVENT OF DANGER AND ACCIDENTS 10

2.11 REQUIREMENTS FOR STABILITY 11

2.12 OCCUPATIONAL SAFETY 11

2.13 AIRBORNE NOISE EMISSIONS 11

2.14 ERGONOMICS 11

3 OPERATING CONDITIONS 12

4 PUMP DESCRIPTION 14

4.1 GENERAL DESCRIPTION OF THE PUMP 14

4.2 SIZES 14

4.3 VARIANTS 14

4.4 COMPONENTS 15

4.4.1 COMPONENTS - BCV 100/150/300 15

4.4.2 COMPONENTS - BCV 400/500 17

4.5 MOTORS 18

4.6 SAFETY AND PROTECTIVE EQUIPMENT 18

4.7 TESTING THE SAFETY AND PROTECTIVE EQUIPMENT 18
4.8 OPERATING MATERIALS AND CHEMICALS 19
5 TRANSPORT 20
6 INSTALLATION AND COMMISSIONING 21
6.1 GENERAL REQUIREMENTS 21
6.2 CONNECTING THE MEDIA LINE 21
6.3 ELECTRICAL INSTALLATION 22
6.3.1 ELECTRICAL CONNECTION 22
6.3.2 ELECTRICAL CONNECTION (VARIAIR BCV 100/150/300) 23
6.4 SWITCH ON THE PUMP 24
6.5 NORMAL OPERATION 24
6.6 SWITCH OFF THE PUMP 24
6.7 RECOMMISSIONING 24
7 TROUBLESHOOTING/TROUBLESHOOTING 26
7.1 FAULT TABLES 26
8 MAINTENANCE, SERVICING AND DISMANTLING 28
8.1 MAINTENANCE AND SERVICING 28
8.2 PREPARATION 30
8.3 MAINTENANCE ACTIVITIES 30
8.3.1 BCV 100-500 (WITH INTEGRATED FILTRATION) 32
8.3.2 BCV 100-500 (FOR EXTERNAL FILTERING) 33
8.3.3 BCV 400-500 (FILTERING AT THE SAFETY VALVE) 33
8.4 MEDIA LINES 33
8.5 CONDITIONS FOR SWITCHING ON AGAIN 33
8.6 SPARE AND WEAR PARTS 34
8.7 TEMPORARY SHUTDOWN 34
8.8 CLEANING 34
8.9 DISMANTLING AND DECOMMISSIONING 35
8.10 STORAGE 35
8.11 WASTE DISPOSAL 36
9 PRODUCT DATA SHEET 37
9.1 PRODUCT OVERVIEW 37
9.2 OPERATING PARAMETERS 37
9.2.1 BCV 100-500 37
9.2.2 BCV 400-500 FD 38
9.2.3 VAU BCV 100-500 39
9.3 OPERATING RESOURCES 39
9.4 TECHNICAL DATA 39

1 TO THE OPERATING INSTRUCTIONS

1.1 GENERAL INFORMATION

These operating instructions are an integral part of the pump and contain the necessary information and important instructions for operating the pump safely and properly. Observing them will help:

- Avoid dangers
- Reduce repair costs and downtime
- increase the reliability and service life of the product

It is the responsibility of the operator to ensure the availability of this document. This applies in particular if the document is lost.

All persons working on the pump must have read and understood the operating manual and these operating instructions.

HINT

For a detailed description of the safety instructions, see chapter 2 "Basic safety instructions".

1.2 STRUCTURE OF THE SAFETY INSTRUCTIONS

Safety instructions are identified by a pictogram and a signal word. The following signal words are used to indicate dangers, prohibitions and important information:

DANGER

This signal word indicates an imminent danger that could result in serious injury or even death.

WARNING

This signal word indicates a potentially imminent danger that could result in serious injury or even death.

CAUTION

This signal word indicates a potentially imminent danger that could result in minor or serious injuries.

ATTENTION

This signal word indicates a potentially imminent danger that could result in material damage.

HINT

This symbol indicates tips, recommendations and further information.

1.3 SAFETY SYMBOLS

Warning signs:

General warning sign

Warning of hand injuries

Warning of hot surfaces

Warning of automatic start-up

Danger of slipping

Tripping hazard

Warning of electrical voltage

Hazardous substance symbol:

Attention, environmentally hazardous

Command sign:

Attention

Use foot protection

Use hand protection

Use hearing protection

Use eye protection

Use a protective mask

Hint:

General information

1.4 ADDITIONAL DOCUMENTATION

In addition to these operating instructions, the following documents and instructions must be observed:

- Safety symbols according to chapter 1.3 on the pump and on hazardous material containers
- Regulations on accident prevention, occupational safety and environmental protection
- Operating instructions and documents for components, assemblies and aids provided by third-party manufacturers.
- Spare parts lists
- Data sheets

1.5 WARRANTY AND LIABILITY

Warranty and liability claims for personal injury or damage to property are invalid if

- Failure to observe the instructions for transport and installation;
- improper use (misuse) or improper operation;
- Failure to observe the operating instructions and the instructions contained therein;
- improper or non-executed maintenance and servicing work;
- incorrect installation, commissioning, maintenance, servicing and cleaning;
- Use of unauthorised operating materials, lubricants or spare parts;
- defective, incorrectly installed or dismantled protective devices;
- inadequate monitoring of pump parts subject to wear;
- Use of externally procured equipment that has not been approved by the manufacturer;
- improper disassembly;

1.6 MODIFICATIONS AND CONVERSIONS

Modifications or conversions are prohibited without written authorisation from the manufacturer and are therefore excluded.

HINT

Description of the safety instructions. See chapter 2.9 "Safety instructions"

2 BASIC SAFETY INSTRUCTIONS

These operating instructions serve as a basis for the safe use and operation of the pump. The operating instructions, in particular the safety instructions and the rules and regulations applicable to the place of use, must be observed by all persons working on or with the pump.

Furthermore, the generally applicable legal and other rules and regulations for accident prevention (e.g. personal protective equipment) and environmental protection must be observed.

HINT

Some activities on the pump require compliance with special safety regulations. These safety instructions can be found in the respective chapters of these operating instructions.

HINT

The operating instructions must always be kept at the place of use and must be freely accessible to all persons working with the pump.

The instructions of the occupational safety specialist and the instructions from the briefings must be followed at all times.

The pump is only intended for the intended use described in the chapter 2.5.

The pump must not be used for purposes other than those for which it is intended.

All work on the pump may only be carried out by qualified and trained personnel (see chapter 2.4 "Personnel qualifications").

The safety instructions given in chapter 2.9 must be observed for all work on the pump.

2.1 PROVISION

The pump is a machine within the meaning of the Machinery Directive 2006/42/EC Art 2a.

The pump conforms to the health and safety requirements of the Machinery Directive 2006/42/EC.

The pump may only be used once the operator has determined that the pump is installed in accordance with the state of the art.

This is fulfilled if, among other things, the operating conditions listed in these operating instructions in accordance with Directive 2006/42/EC Annex 1 Para. 1.7.4.2.i have been fully implemented.

2.2 OBLIGATIONS OF THE OPERATOR

The operator undertakes to only allow persons to work on the pump who

- are familiar with the basic occupational safety and accident prevention regulations;
- were instructed for the activities on the pump;
- have read and understood these operating instructions before carrying out any work on the pump;
- have reached the legal minimum age;
- are fit for use;
- are rested and not under the influence of drugs or medication;
- reliably fulfil the work assigned.

In addition, the operator must train staff at regular intervals and inform them about the hazards.

The personnel of the operating company must be permanently committed to safe working practices and informed about the dangers and risks of the pump. This applies in particular to the safety instructions.

The operator must provide the personnel with the necessary protective equipment.

2.3 OBLIGATIONS OF THE STAFF

All persons who are commissioned to work on the pump are obliged, before starting work, to

- to observe the basic regulations on occupational safety and accident prevention and
- to read and observe these operating instructions.

HINT

Only persons who have read and understood these operating instructions may carry out work on and with the pump!

2.4 PERSONNEL QUALIFICATION

Certain activities require the personnel carrying out the work to have certain qualifications. The following table summarises these qualifications:

Activity	Minimum qualification of personnel	
	Instructed persons with specialised training	Instructed operating personnel
Commissioning	x	
Maintenance & servicing	x	
Operation		x
Dismantling	x	
Symbol "x" authorised personnel		

2.5 INTENDED USE

The operational safety of the pump is only guaranteed if it is used as intended. Intended use also includes observing the operating instructions for this product and any components, as well as carrying out all maintenance and service work.

The pump may only be used as intended in accordance with the machine description and the technical data.

The intended use is summarised below:

- Conveying any other gases, in particular hazardous substances, is not permitted and prohibited.
- The permissible technical parameters must be complied with.
- The pump must not be operated in potentially explosive atmospheres.
- The pump must be protected from the weather.
- The manufacturer must be consulted for any operation outside the technical parameters specified in the product data sheet.
- The pump evacuates air to a vacuum in accordance with chapter 9.2
- The pump is designed for continuous operation in compliance with the permissible operating parameters (chapter 9.2).

ATTENTION

Only use the pump for its intended purpose and in a technically safe condition!

This is the only way to guarantee the operational safety of the pump!

2.6 UNAUTHORISED USE

The incorrect applications listed below are not permitted and pose a risk to people and machinery. In particular

- the evacuation of hazardous substances, in particular flammable, explosive or toxic gases
- use in potentially explosive environments (explosive gas/vapour/mist/air mixtures or dust/air mixtures or hybrid mixtures of air and flammable substances)
- Use of the pump in non-commercial applications
- operating the pump when it is not fully assembled
- Back pressures on the outlet side above 100 mbar

2.7 PROTECTIVE MEASURES FOR USERS

Personal protective equipment must be worn when working on the pump in order to minimise health hazards.

The protective equipment required for the respective work must always be worn during work.

Instructions on personal protective equipment displayed in the work area must be followed.

WARNING

Risk of injury to hands due to crushing, cutting and high temperatures

Hand protection in accordance with the glove plan must be worn during all work on the pump.

HINT

The hand protection must be provided by the operator, must be suitable for the activities to be carried out and must comply with the applicable standards (e.g. EN 388).

WARNING

Risk of injury to feet from crushing and falling objects

Foot protection must be worn during all work on the pump.

HINT

The foot protection must be provided by the operator, must be suitable for the activities to be carried out and must comply with the applicable standards (e.g. DIN EN ISO 20345).

WARNING

Hearing damage due to high volume

Hearing protection must be worn during activities that must be carried out while the pump is running.

HINT

Hearing protection must be provided by the operator, must be suitable for the noise levels generated and must comply with the applicable standards (e.g. DIN EN 352).

WARNING

Eye injuries due to flying particles

Eye protection must be worn during all cleaning work on the pump.

HINT

Eye protection must be provided by the operator, must be suitable for the activities to be carried out and must comply with the applicable standards (e.g. EN 166).

WARNING

Health damage to the respiratory tract caused by pollutants and particles

Respiratory protection must be worn during all cleaning work on the pump.

HINT

Respiratory protection must be provided by the operator, must be suitable for the resulting air pollution and must comply with the applicable standards (e.g. DIN EN 143, filter class FFP2).

2.8 INFORMATION ON RESIDUAL RISKS

The pump is built in accordance with the current state of the art and recognised safety regulations. When using the pump, health hazards for persons working directly with the pump and third parties cannot be ruled out.

2.9 SAFETY INSTRUCTIONS

The dangers and risks in the respective life phases of the pump are described below. The following hazard warnings must be observed.

DANGER

Danger to life due to defective, dismantled and manipulated protective devices

The pump may only be operated if all safety and protective devices are in place and fully functional!

Faulty safety and protective equipment can lead to dangerous situations!

For this reason:

1. Switch off the pump immediately,
2. Secure against restarting and
3. Disconnect from air supply and electrical power!

DANGER

Danger to life due to electric shock

Personnel qualification

Work and tasks on the electrical system may only be carried out by qualified electricians who can demonstrate that they have successfully completed recognised training in the relevant specialist area and have been instructed in the special technical features of the pump.

Without exception, persons who do not fulfil the above conditions are prohibited from carrying out electrical work, including the simplest auxiliary activities.

To carry out tasks and activities on the electrical system of the pump, work must be carried out in accordance with the five safety rules as per DIN VDE 0105.

DANGER

Danger to life due to electric shock

Measures in the event of damage to the electrical installation

Damage to the electrical installation and contact with live parts can be life-threatening.

The following measures are therefore mandatory:

- In the event of damage to the electrical installation, switch off the pump immediately and inform the responsible organisation.
- Repairs must be carried out by a qualified electrician.

DANGER

Danger to life due to unexpected start-up

Countermeasures

The following steps must be followed when preparing for servicing and maintenance work:

1. Switch off the pump and all attached assemblies.
2. Disconnect the pump from the supply voltage and proceed in accordance with the five safety rules (VDE105).
3. Disconnect the pump from the air supply.

DANGER

Fire and danger to life due to insufficient distance to neighbouring parts

If the pump is enclosed, minimum distances to the product must be maintained to prevent potential fires.

Information on minimum distances can be found in chapter 6 "Installation and commissioning".

DANGER

Danger to life due to arcing and creepage distance when disconnecting plug connections

Always switch off the power supply before disconnecting plug connections.

WARNING

Risk of injury! Risk of crushing in the hand and arm area due to product assembly

If assembly work is carried out, the employee must be trained in the use of lifting equipment and have provided proof of this. Use suitable protective equipment!

WARNING

Risk of injury due to incorrect lifting conditions

If assembly work is carried out, the employee must be trained in the use of lifting equipment and have provided proof of this.

The pump may only be lifted in accordance with the specifications (see chapter 5 "Transport").

WARNING

Safety risk when leaving the operating parameters

Safe operation of the pump can no longer be guaranteed outside the permitted operating parameters. The limits of the permissible operating parameters are shown in the chapter 9.2.

WARNING

Safety risk due to spare parts not approved by the manufacturer

Gebr. Becker Spare parts have been checked by us for their technical requirements and safety.

Unapproved spare parts can pose a danger to people and the pump.

WARNING

Danger from hot components and equipment

Media and pump parts can reach high temperatures during operation. Before intervening manually in the pump, it is therefore necessary to wait until it has cooled down before working safely with protective gloves to avoid burns and scalding.

WARNING

Risk of injury due to stored residual energy

The occurrence of residual mechanical, pneumatic and electrical energy on the pump after actuating the operating element for stopping in an emergency or after switching off the pump must be taken into account!

WARNING

Risk of injury due to slipping, tripping and falling

The operator of the pump is responsible for traffic safety. If operating fluids leak from the pump, the areas must be cordoned off and labelled accordingly and suitable measures must be taken.

WARNING

Environmental hazards due to hazardous substances

The operating materials (especially oils) must not be disposed of in the environment. Disposal must comply with the requirements for the disposal of hazardous substances and the Waste Oil Ordinance (AltölV).

CAUTION

Contamination and damage to the environment due to operating materials

The operating fluids used for the proper functioning of the pump and water contaminated with these operating fluids can pose a risk to the environment.

Suitable absorbents must always be kept ready to ensure the rapid absorption of leaked operating materials and contaminated water.

Used absorbents must always be disposed of in accordance with the prescribed procedures.

All environmental protection regulations must always be observed when handling and disposing of operating materials.

Operating materials and contaminated water must be disposed of in accordance with local environmental protection regulations.

HINT

Wear safety shoes

Foot protection must be worn during all work on the pump.

HINT

Wear protective gloves

The pump must be allowed to cool down until it is safe to carry out work with protective gloves.

If this time cannot be guaranteed, protective gloves with adequate heat protection must be used. The exact model can be found in the operator's glove plan.

HINT

Wear chemical protective gloves

Caution: Risk of scalding from hot oil!

2.10 BEHAVIOUR IN THE EVENT OF DANGER AND ACCIDENTS

The protective measures to be taken and the responsibility for drawing up an occupational safety concept lie with the operator of the workplace.

The operator must ensure safe use through the "Operating conditions" described in chapter 3.

2.11 REQUIREMENTS FOR STABILITY

The pump fulfils the requirements for stability in accordance with DIN EN 1012-2 and must be installed as horizontally as possible on a level surface.

2.12 OCCUPATIONAL SAFETY

The pump has been set up in accordance with the Machinery Directive 2006/42/EC and the relevant health and safety and accident prevention regulations. Before starting repair work, the pump must be de-energised and depressurised to prevent accidents. Previously removed protective devices must be refitted before commissioning.

2.13 AIRBORNE NOISE EMISSIONS

According to Directive 2006/42/EC, information on the airborne noise emission of the pump must be provided. Detailed information can be found in the Machinery Directive under point 1.7.4.2.

Information on the pump in this regard can be found in the chapter 9.2 "Operating parameters".

2.14 ERGONOMICS

With regard to maintenance and servicing, special behaviour with regard to ergonomics must be taken into account in accordance with Directive 2006/42/EC Annex i 1.1.6 "Ergonomics":

- The pump must not be lifted using muscle power. A hoist must always be used.

3 OPERATING CONDITIONS

The CE conformity of the product only becomes legally valid when all product safety requirements of the "operating conditions" formulated in this chapter within the meaning of Directive 2006/42/EC Annex I 1.7.4.2.i have been fully realised by the operator. Only in this case is CE conformity valid and the pump may be operated.

Operating condition 1: Safety instructions for maintenance work

1. **Standalone products - not implemented in a control system**

   Shutting down the pump for maintenance

   In the event of maintenance, work must be carried out with the protective devices removed. This work may only be carried out when the pump is at a standstill. To ensure the safe shutdown of the pump, the pump must be disconnected from the power supply and the five safety rules in accordance with DIN VDE 0105 must be observed.

2. **Implemented products - product is controlled via the operator's control system**

   If the pump is implemented in a control system by the operator, the following conditions apply for the "Maintenance" operating mode:

   - The drive must be de-energised
   - Or, in the case of a shutdown stored in the control system, comply with the requirements of DIN EN 61800-1.

Operating condition 2: Measures against unexpected start-up

Energy separation:

Before carrying out any servicing or maintenance work or interfering with the product, it must be manually disconnected from the energy source in accordance with DIN EN ISO 14118, section 4.2.

Working under voltage (FI operation):

When troubleshooting under voltage, the start command of the frequency inverter (FI) must also be secured with a start signal from the operator level using an AND link. This prevents unexpected start-up in the event of a voltage interruption or fault command.

Operating condition 3: Ventilation of the operating room

The operator must design the operating room in such a way that the atmospheric air pressure is maintained even in the event of a product fault.

This prevents negative pressure from leading to physical injury or escape routes being blocked by blocked doors.

Operating condition 4: Behaviour when leaving the operating parameters

If the pump deviates noticeably from the usual operating parameters, it must be switched off immediately and maintenance carried out.

Operation outside the specified operating parameters is prohibited by the manufacturer.

Operating condition 5: Permitted operating materials (process media)

The permissible operating materials are defined within the scope of the intended use.

It is prohibited to convey hazardous substances - especially pyrophoric substances - as this cannot rule out the possibility of ignition of an explosive atmosphere on hot surfaces.

Operating condition 6: Permitted lubricants

The approved lubricants are listed in chapter 9.3.

Operating condition 7: Electrical protection of the motor

The motor must be protected using state-of-the-art technology. At least one motor protection switch and separate temperature monitoring are required.

Temperature monitoring based solely on plausibility checks of the current consumption is not permitted.

Operating condition 8: Dimensioning the electrical supply line

Unless otherwise specified by the operator, the supplier of the electrical equipment is not responsible for providing the supply line and the overcurrent protection device.

Operating condition 9: Command device for stopping

The pump must have a device with which it can be completely shut down safely.

Each workstation is equipped with a control device which - depending on the hazard - switches off individual or all functions of the pump in order to establish a safe state.

- The stop command has priority over any start command.
- After shutting down, the power supplies to the drives concerned must be disconnected.
- It must not be possible to overwrite or undo a shutdown command that has been issued.

Operating condition 10: Command device for emergency shutdown

The pump must be equipped with at least one EMERGENCY STOP command device. If necessary, several devices must be provided to ensure a safe shutdown in an emergency.

Operating condition 11: Disconnection from the power source by main switch

The pump must be equipped with devices with which it can be safely disconnected from any energy source.

These devices must be clearly labelled and lockable if reconnection could pose a danger to persons.

Lockability is also required if the operating personnel cannot monitor the permanent interruption of the energy supply from every access point.

Operating condition 12: Ensuring cooling

The cooling volume flow must be unhindered on both the intake and exhaust sides.

Contamination (dust in the operating room) can lead to deposits on the pump, which can impair cooling. The operator must ensure that the pump is cleaned regularly.

Operating condition 13: Ensuring unobstructed exhaust air

As standard, the evacuated air is discharged from the pump directly into the environment. Optionally, the exhaust air can be discharged via a connected exhaust air pipe. In this case, it is essential to ensure that the exhaust air can flow through the exhaust air duct unhindered and without significant back pressure (< 100 mbar).

Operating condition 14: Ensuring the vacuum limitation

The pumps (BCV 150 to BCV 500) are equipped with a vacuum safety valve as standard. The factory-set value (type plate: max. vacuum) is for the safety of the pump and must not be changed.

4 PUMP DESCRIPTION

This chapter explains the assemblies and components of the pump and how they work.

The following information is intended to help you understand the operation of the pump. This information can help to avoid dangers and errors due to incorrect operation.

4.1 GENERAL DESCRIPTION OF THE PUMP

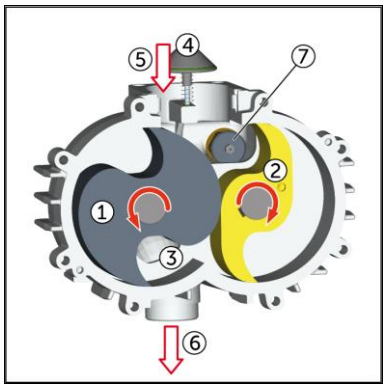

The pump is a claw vacuum pump.

When the claw-shaped rotors (1+2) rotate, gas flows through the non-return valve (4) into the suction nozzle (5) of the pump housing.

The special shape of the two rotors, which rotate in opposite directions without contact, ensures that the gas is drawn in, compressed in the compression chamber (3) and discharged again via the outlet nozzle (6).

The vacuum safety valve (7) opens if the suction pressure falls below the permissible minimum pressure (e.g. if the supply line of the running pump is closed).

Lubricants are not required in the compression chamber, as the internal sealing between the rotors and towards the housing is ensured by very small gaps.

4.2 SIZES

Several pumps of different sizes are listed in these operating instructions, as they

- work according to the same active principle,
- have the same intended use,
- are subject to the same legal and standardisation requirements,
- have a similar design,
- have similar physical characteristics,
- and are also very similar in terms of maintenance, service and commissioning.

4.3 VARIANTS

Within the BCV 100-500 series, a distinction is made between 4 variants.

Sizes	Variants			
	with integrated filtering (standard)	without filtering	with frequency inverter (VARIAIR)	Flat design (FD=Flat Design)
BCV 100	x	x	x	---
BCV 150	x	x	x	---
BCV 300	x	x	x	---
BCV 400	x	x	---	x
BCV 500	x	x	---	x

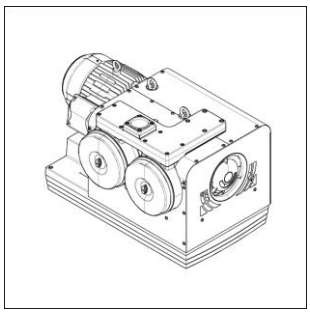

BCV XXX (Standard)

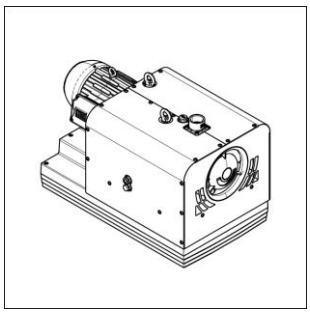

BCV XXX (without filtering)

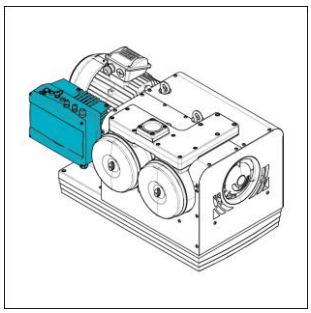

VARIAIR BCV XXX

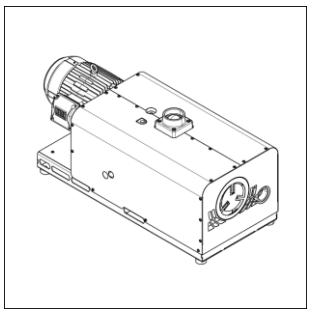

BCV XXX FD (flat version)

The VARIAIR pumps are variants with frequency inverters.

Note on the series

The integrated frequency inverter adapts the pump's performance data to demand.

The energy requirement is optimised and a constant vacuum is guaranteed within the released characteristic map.

The "gentle" start-up of the pumps reduces the load on the mechanical components and extends the service life.

4.4 COMPONENTS

4.4.1 COMPONENTS - BCV 100/150/300

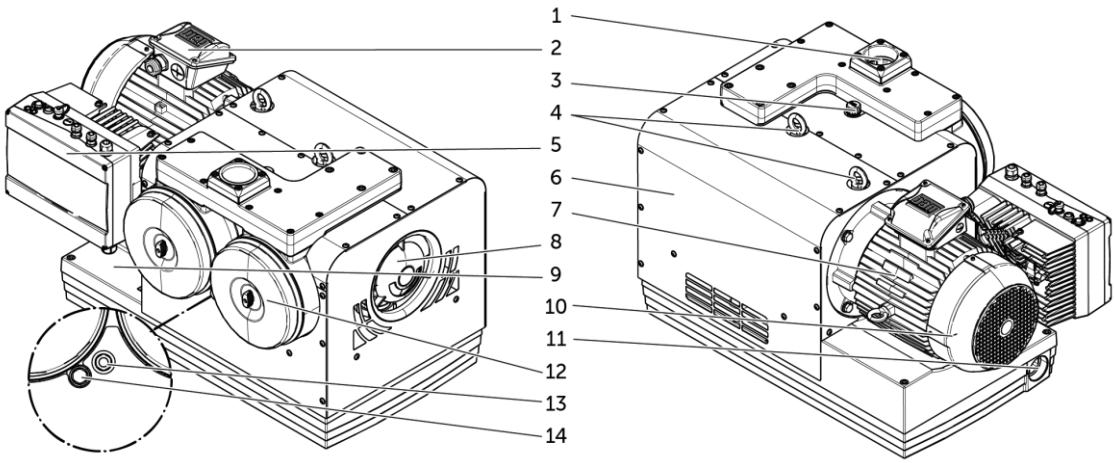

Position	Component	Function
1	Connection flange incl. non-return valve	Suction connection, prevention of backflow of process air into the application
2	Terminal box	Electrical connection for customers
3	Screw cap	Sealing cap (oil filler)
4	Eyebolts	Attachment points
5	Frequency inverter (optional)	Electrical connection (only for VARIAIR BCV), speed control
6	Pump unit	The pump unit includes pump housing, piston and slider
7	Motor rating plate	Conformity mark and technical data of the motor
8	Safety valve	When the permitted operating parameters (preset value) are exceeded, the valve opens and pressure equalisation takes place
9	Device type plate	Conformity mark and technical data of the pump
10	Engine	Drive
11	Device base with connection flange	Stable installation, gas outlet
12	Filter assembly (optional)	Filtering the intake air
13	Oil sight glass	Oil level indicator
14	Screw plug	Oil drain plug

Table: Components

4.4.2 COMPONENTS - BCV 400/500

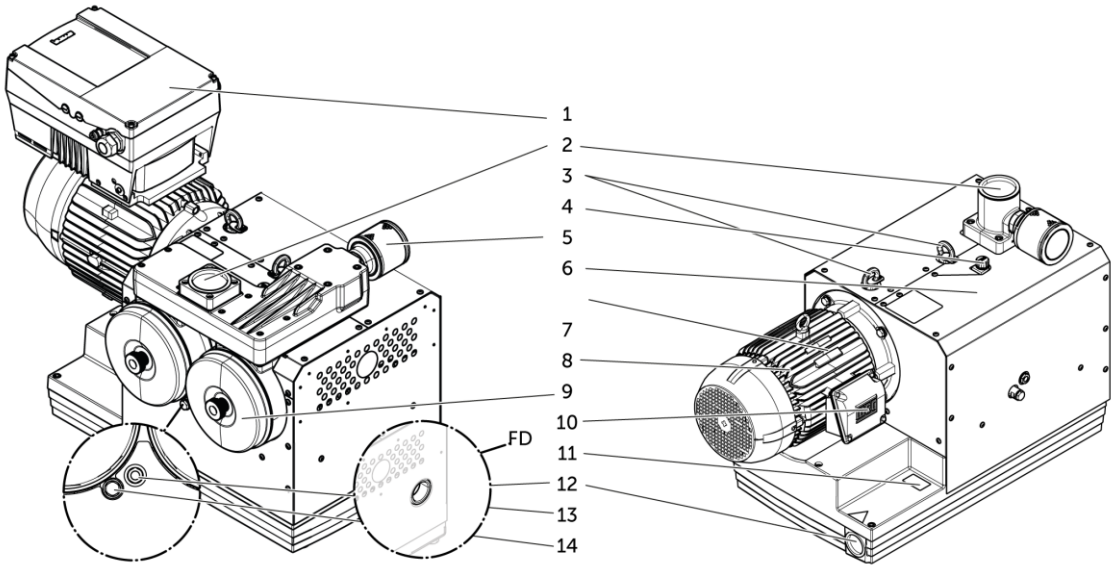

Position	Component	Function
1	Frequency inverter (optional)	Electrical connection (only for VARIAIR BCV), speed control
2	Connection flange incl. non-return valve	Suction connection, valve prevents backflow of process air
3	Eyebolts	Attachment points
4	Screw cap	Sealing cap (oil filler)
5	Safety valve with suction filter	If the permitted operating parameters (preset value) are exceeded, the valve opens and pressure equalisation takes place. The filter prevents dirt from entering the pump.
6	Pump unit	The pump unit includes pump housing, claw rotors and synchronisation gears
7	Motor rating plate	Conformity labelling and technical data of the motor
8	Engine	Drive
9	Filter assembly (optional)	Filtering the intake air
10	Terminal box	Electrical connection for customers
11	Device type plate	Conformity labelling and technical data of the pump
12	Connection flange in the appliance base, for FD variant connection in the front cover	Gas outlet, exhaust air connection
13	Oil sight glass	Oil level indicator
14	Screw plug	Oil drain plug

Table: Components

4.5 MOTORS

The characteristics of the motor used can be found on the motor rating plate.

4.6 SAFETY AND PROTECTIVE EQUIPMENT

DANGER

Danger to life due to defective, dismantled and manipulated protective devices

HINT

For a detailed description of the safety instructions, see chapter 2 "Basic safety instructions".

The pump's protective devices must not be dismantled, modified or put out of operation. The pump must be shut down and secured immediately if any protective devices have been removed, modified or taken out of operation.

Defects in protective devices must be rectified immediately. All protective devices must be undamaged, fully assembled and functional. Warning and information signs must be clearly visible.

All protective devices must be checked for functionality, damage and completeness after each maintenance of the pump.

If a maintenance activity requires the dismantling of protective devices, these may only be dismantled for the duration of the maintenance activity. Immediately after completion of the maintenance work, all protective devices must be fully installed at the intended location and checked for proper functioning.

The prescribed inspection intervals for protective devices must be observed and complied with. Protective devices may only be maintained, replaced and serviced by trained, instructed and authorised specialist personnel.

Unauthorised tampering with or manipulation of the safety-related parts of the pump is strictly prohibited and must be reported immediately to the responsible department.

All safety and accident prevention equipment, such as warning and information signs, covers, protective panelling, etc., must be in place. The removal or modification of these devices is prohibited.

Damaged equipment must be repaired immediately.

An overview of the pump with the designations of the protective devices is shown below.

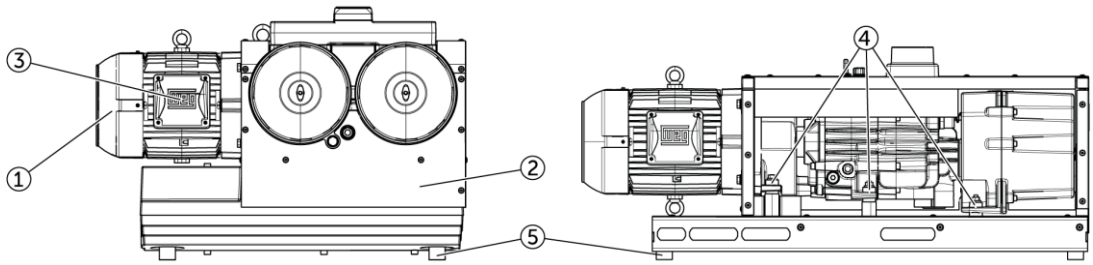

Position	Component	Place
1	Fan cover of the motor	Front of the motor
2	Cover (multi-part)	Front/cover side of the motor
3	Terminal box cover	Cover side of the terminal box
4	Vibration decoupling elements	Connection of appliance feet to the foundation/rack
5	Vibration decoupling elements	Connection of appliance feet to the foundation/rack

Table: Protective devices

4.7 TESTING THE SAFETY AND PROTECTIVE EQUIPMENT

HINT

All safety and protective equipment must be checked regularly.

For maintenance intervals, see chapter 8.1

The condition and function of safety and protective equipment must be checked if:

- modifications and repairs have been carried out on the pump
- Damage has occurred to the pump
- service and maintenance intervals are to be carried out

4.8 OPERATING MATERIALS AND CHEMICALS

CAUTION

Contamination and damage to the environment due to operating materials

HINT

Description of the safety instructions. See chapter 2.9 "Safety instructions"

5 TRANSPORT

WARNING

Risk of injury due to incorrect lifting conditions

HINT

For a detailed description of the safety instructions, see chapter 2 "Basic safety instructions".

HINT

Wear suitable PPE

ATTENTION

- Do not stand under suspended loads.
- Place the transported goods on a horizontal surface (max. inclination: 10° in all directions).

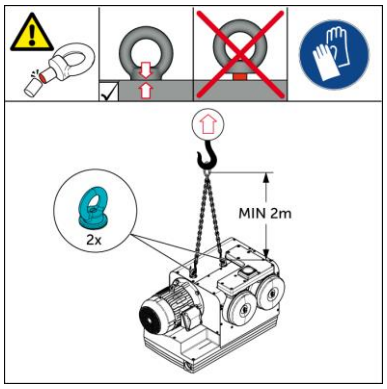

BCV 100-500

Please note the following:

- Always suspend the pump from 2 load suspension devices.
- The pump may only be attached to the eyebolts.
- Always screw in the eyebolts as far as they will go.
- Select lifting gear according to the total weight to be transported.
- Observe the splay angle.
- Secure the pump against tipping and falling.

ATTENTION

Use high-strength eyebolts

Only Deltalock OB-D M12 eyebolts are permitted for transporting the BCV 400/500.

These high-strength eyebolts are designed for safety-relevant lifting and transport applications and fulfil the requirements for safe transport.

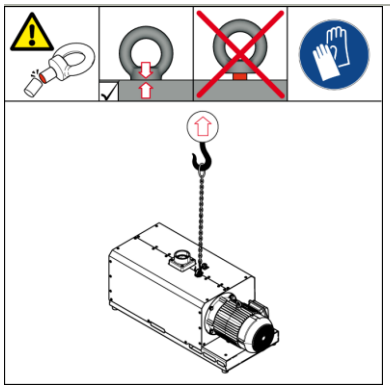

BCV 400/500 FD

Please note the following:

- The pump may only be attached to the eyebolt.
- Always screw in the eyebolt as far as it will go.
- Select lifting gear according to the total weight to be transported.

6 INSTALLATION AND COMMISSIONING

6.1 GENERAL REQUIREMENTS

The pump must be installed horizontally on a level surface.

The installation location of the pump should be dry and protected from splashing water.

We recommend setting up the pump so that maintenance work can be carried out easily.

The following points must be observed when installing components and assemblies in order to avoid injuries and damage to the pump:

- Components from third-party manufacturers may only be installed if they have been approved by the manufacturer and comply with the directives and laws applicable in the country of use.
- Loose and non-pump parts must be removed from the pump environment after installation.
- Protruding parts (pipes, cables, etc.) must be properly installed, laid and labelled.
- Contact points of components must be clean and intact.

ATTENTION

Compliance with the minimum distance

The cooling air inlet / cooling air outlet must not be covered, otherwise heat dissipation will be impaired.

The minimum distance between the pump and all neighbouring parts must be observed in accordance with the following table.

Failure to observe the minimum distances can lead to a fire risk due to the high level of heat emitted.

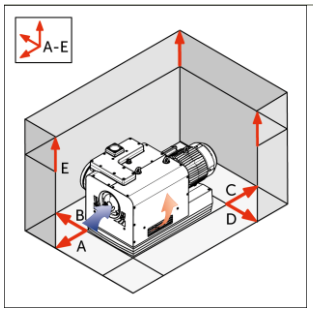

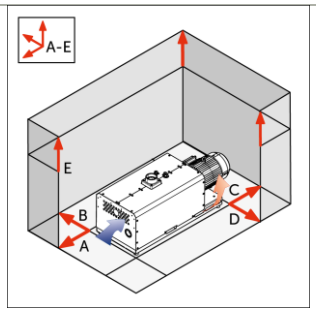

A	B	C	D	E
100 cm	100 cm	100 cm	100 cm	10 cm

Table: Minimum distances

ATTENTION

Comply with operating parameters

Safe operation of the pump can no longer be guaranteed outside the permitted operating parameters (for permitted operating parameters, see chapter 9.2).

HINT

Fastening to the substrate

The pump can be installed on solid ground without anchoring. When installing on a static substructure, the built-in feet must be screwed in from below and thus fixed.

Dynamic installation is not permitted with these pumps!

6.2 CONNECTING THE MEDIA LINE

WARNING

When installing media lines that have a high temperature, please note that they must be covered, insulated and labelled accordingly to prevent injury and pump damage.

Remove the sealing plug

The suction connection (Pos.1) and the exhaust air connection (Pos.11) are protected against the ingress of dirt and foreign bodies during transport with sealing plugs. These must be removed shortly before commissioning.

Dimensioning the suction line

The diameter of the suction line depends on the pump size and the line length.

There is an internal thread in the connection flange. Cables with a minimum diameter in accordance with the following table must be used.

Size	BCV 100	BCV 150	BCV 300	BCV 400	BCV 500
Connection (standard + filtering)	G 2 ½" NPT 2 ½"	G 2 ½" NPT 2 ½"	G 2 ½" NPT 2 ½"	G 3" NPT 3"	G 3" NPT 3"
Connection (without filtering)	G 1 ½" NPT 1 ½"	G 1 ½" NPT 1 ½"	G 2" NPT 2"	G 3" NPT 3"	G 3" NPT 3"

Table: Suction - Sizes BCV 100-500

Keep connections free of oil, grease, water and other soiling.

The supply line must be installed mechanically stress-free using a flexible hose or rigid pipe.

Exhaust air

The exhaust air connection provided for this purpose can be used to discharge the heated process air.

The diameter of the exhaust air pipe depends on the pump size.

There is an internal thread in the connection flange. Cables with a minimum diameter in accordance with the following table must be used.

Size	BCV 100	BCV 150	BCV 300	BCV 400	BCV 500
Connection (standard + filtering)	G 1 ½"	G 1 ½"	G 2"	G 2"	G 2"

Table: Exhaust air - Sizes BCV 100-500

The drain must be installed mechanically stress-free using a flexible hose or rigid pipe.

It must be ensured that the exhaust air can flow out without major back pressure (see chapter 2.6).

At high exhaust air temperatures, the exhaust air duct must be designed in such a way that it does not pose any danger.

6.3 ELECTRICAL INSTALLATION

DANGER

Danger to life due to electric shock - Personnel qualification

DANGER

Danger to life due to defective, dismantled and manipulated protective devices

DANGER

Danger to life due to unexpected start-up

HINT

For a detailed description of the safety instructions, see chapter 2 "Basic safety instructions".

The electrical installation of the pump must comply with the requirements of Directive 2006/42/EC and EN 60204.

If the pump is integrated into a control system, it must be ensured that the pump does not restart automatically after an unintentional voltage drop. The measures against unexpected start-up in accordance with DIN EN ISO 14118 must be realised. This also applies after a shutdown following an emergency stop.

The following points must be observed when installing the pump:

- The pump may be operated with a maximum of 10 start/stop cycles per hour.
- The pump supply line must meet the minimum requirements of the state of the art.

6.3.1 ELECTRICAL CONNECTION

HINT

For pumps without a frequency inverter with a motor output ≥ 5.5 kW, we recommend installing a star-delta circuit or a soft start circuit.

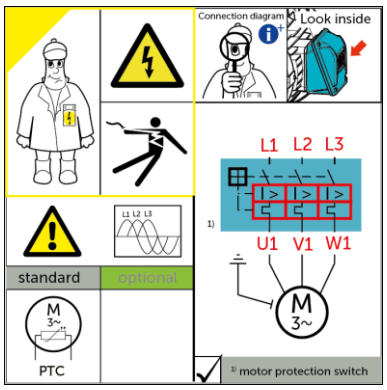

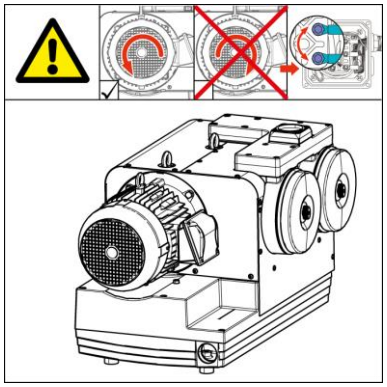

Connecting the motor

The motor must be connected in accordance with the wiring diagram (see terminal box cover).

The following points must be observed when installing the pump:

- The permissible connection types of the motor can be found on the motor rating plate.
- The pump must be protected by an overload protection (motor protection switch). Operation without appropriate protection is prohibited.
- The existing motor temperature protection (PTC thermistor, bimetal switch) must be connected.

Authorised direction of rotation of the pump

Before commissioning, check that the pump is rotating in the prescribed direction (observe the direction of rotation arrow on the fan cover). To do this, only start the pump briefly (max. 3 seconds), as operation in the wrong direction of rotation will damage the pump.

If the pump does not run in the specified direction of rotation (looking at the motor's fan wheel), this must be changed by swapping two connection phases.

6.3.2 ELECTRICAL CONNECTION (VARIAIR BCV 100/150/300)

HINT

For information on the frequency inverter, see additional instructions "VARIAIR frequency inverter"

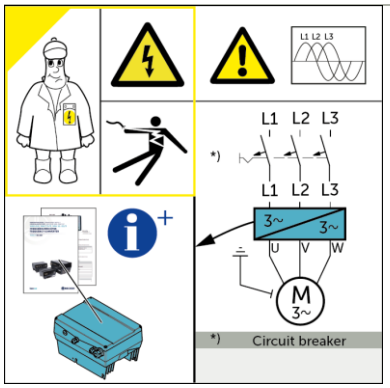

The following points must be observed when installing the pump:

- The connection from the frequency inverter to the motor has been pre-installed at the factory. This connection must not be changed (e.g. extended).
- The frequency inverter must not be installed at a location other than the intended location.
- The pump must be protected by a suitable circuit breaker. Operation without an appropriate fuse is prohibited.

Size	Frequency inverter	Circuit breaker
VARIAIR BCV 100	VAU 4/4	C 16
VARIAIR BCV 100	VAU B	C 16
VARIAIR BCV 150	VAU 4/4	C 16
VARIAIR BCV 150	VAU B	C 16
VARIAIR BCV 300	VAU 7.5/3	C 20
VARIAIR BCV 300	VAU C	C 20

Table: Circuit breaker

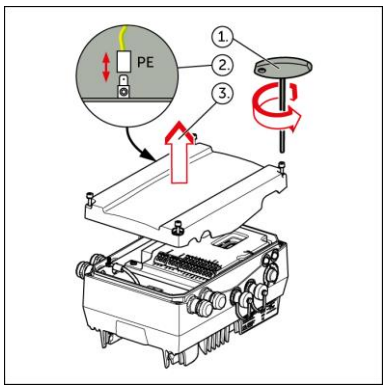

Connecting the frequency inverter

To access the connection terminal, the cover of the frequency inverter must be removed.

Proceed as follows:

1. Loosen the 4 fastening screws of the cover.
2. Disconnect the PE plug on the underside of the cover.
3. Remove cover
4. When closing the cover later, make sure that the PE plug is plugged back in.
5. Tighten the four screws on the cover to 2 Nm using a 3 mm Allen key.

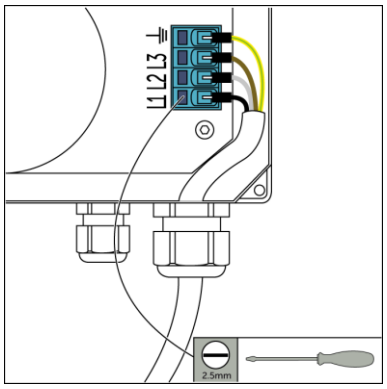

The adjacent figure shows the terminal assignments for the supply line.

Further information on the correct cable cross-sections or stripping lengths can be found in the additional instructions for the inverter series

6.4 SWITCH ON THE PUMP

The pump is switched on via switching elements in the application. After switching on, the pump switches directly to normal operating mode. There are no subordinate operating modes for set-up, maintenance or troubleshooting.

The pump may only be switched on when it has been properly installed, the electrical connection has been made correctly and the media lines have been connected.

When using a VARIAIR pump, it depends on the customer-specific parameterisation which additional measures (release, setpoint specification) are required to switch to normal operation.

6.5 NORMAL OPERATION

In normal operation, the pump operates fully automatically within its physical limits, in accordance with the customer's control system.

6.6 SWITCH OFF THE PUMP

1. shutdown

To switch off, the pump must be shut down from the application and secured against being switched on again.

In addition, a warning sign must be attached to the mains disconnection device.

All electrical equipment must be disconnected individually. Maintenance during operation or when the pump is switched on is strictly prohibited.

2. disconnection from the power supply

A qualified electrician switches the motor off and disconnects it. After carrying out the 5 safety rules, non-qualified electricians may also carry out work on the pump.

After completion of the activities, the activities under the point: "Recommissioning" must be followed.

6.7 RECOMMISSIONING

After the storage and shutdown period, the pump must be checked to ensure that it is operational. If it is not operational, appropriate maintenance and servicing measures must be carried out to restore its operational capability.

The following points must be worked through in the specified order to enable the pump to be safely recommissioned:

1. The pump must be serviced, cleaned and, if necessary, repaired in accordance with the chapters "Servicing and maintenance" and "Cleaning".
2. The electrical connection must be carried out in accordance with chapter 6.3. The power supply must not yet be restored.
3. All safety devices must be fitted and checked for functionality and effectiveness. Damaged parts must be replaced immediately.

After completing the above points and taking into account the section "Switching on the pump", see chapter 6.4, the pump can be put back into operation.

7 TROUBLESHOOTING/TROUBLESHOOTING

DANGER
Danger to life due to electric shock - Personnel qualification

DANGER
Danger to life due to defective, dismantled and manipulated protective devices

DANGER
Danger to life due to unexpected start-up

WARNING
Danger from hot components and equipment

WARNING
Risk of injury due to slipping, tripping

HINT
For a detailed description of the safety instructions, see chapter 2 "Basic safety instructions".

If troubleshooting is carried out immediately after operation, the cooling time must be observed.

Troubleshooting on the pump is only permitted under the following conditions:

Shut down:

For troubleshooting, the pump must be shut down and secured against being switched on again. In addition, a warning sign must be attached to the mains disconnection device.

All existing electrical equipment must be individually disconnected.

If safety devices have to be dismantled or modified for troubleshooting purposes, they must be refitted, adjusted and tested after the maintenance and servicing work has been completed and before the pump is started.

A qualified electrician may then carry out work on the pump.

Once the work has been completed, the pump may be put back into operation after a visual inspection.

When troubleshooting, check the pump for defects in particular.

- Damage, in particular to:
  - Ventilation grilles
  - Screw connections
  - Media lines
  - Electrical cables
- Leaks
- Loose objects
- Loose screw connections or fastenings
- Contact protection on live parts.

HINT
Visual inspection: The pump is free of foreign objects. After an initial inspection, the pump is free of damage. This also includes checking the electrical and pneumatic components and connections.

Instruct unauthorised persons to leave the pump.

If defects and hazards become apparent during the inspection, the pump must be shut down immediately. The pump may only be put into operation if it is in perfect condition.

The chapter 8.1 "Maintenance and servicing" must be followed.

7.1 FAULT TABLES

The following tables describe possible causes of faults and the activities required to rectify them. In the event of faults that cannot be rectified using the following instructions, please contact Gebr. Becker.

The pump does not reach the required vacuum		
Possible cause	Review	Troubleshooting
Leakage in the supply line	Visual inspection of the supply line elements (e.g. piping, fitting, hose clamps)	Replacing the faulty supply line elements
Damaged or missing seal of the filter housing	Check the seal for damage Check for "whistling" noises	Replacing the faulty seal
Resistance in the supply line too high	Check the dimensioning of the supply line	Carry out dimensioning according to the operating instructions Further support by BECKER service
Resistance in the supply line too high	Check supply lines for kinks and deformations	Repair supply lines if necessary
Resistance in the supply line too high	Check throttle elements for opening condition	Open throttle elements if necessary
Filter dirty	Check filter contamination	Clean / replace filter
Variant - Without filtration: Strainer dirty	Check sieve contamination	Clean sieve

Table: Fault tables: The pump does not reach the required vacuum

The pump does not start		
Possible cause	Review	Troubleshooting
Supply voltage is not present	Check electrical protection devices (e.g. motor protection switch, fuses, emergency stop).	Have the identified fault rectified by a qualified electrician
Supply voltage is not present	Check electrical connection cable	Repairing the connection line
Supply voltage is not present	Check electrical connection	Have the identified fault rectified by a qualified electrician
VARIAIR variant: Frequency inverter is in fault state	Red LED on the inverter lights up	Troubleshooting according to the operating instructions of the inverter
VARIAIR variant: Control faulty	Check control signals (e.g. enable, setpoint, fieldbus)	Set control signals (e.g. enable, setpoint, field bus) as required.
Pump mechanically blocked	Rule out electrical causes Check the free movement of the motor fan (with a screwdriver)	Contact BECKER service

Table: Fault tables: The pump does not start

8 MAINTENANCE, SERVICING AND DISMANTLING

DANGER

Danger to life due to electric shock - Personnel qualification

DANGER

Danger to life due to defective, dismantled and manipulated protective devices

WARNING

Danger from hot components and equipment

CAUTION

Contamination and damage to the environment due to operating materials

HINT

For a detailed description of the safety instructions, see chapter 2 "Basic safety instructions".

HINT

Wear suitable PPE

If a maintenance activity requires the dismantling of protective devices, these may only be dismantled for the duration of the maintenance activity. Immediately after completion of the maintenance work, all protective devices must be fully installed in the designated position and checked for proper functioning.

The prescribed inspection intervals for protective devices must be observed and complied with. Protective devices may only be maintained, replaced and serviced by trained, instructed and authorised specialist personnel.

Safety-related parts of the pump could be damaged or disabled by unauthorised tampering or manipulation. Unauthorised tampering and manipulation of the safety-related parts of the pump, adjustable components, is strictly prohibited and must be reported immediately to the responsible body.

8.1 MAINTENANCE AND SERVICING

As a prerequisite for safe and proper operation, it is essential that the pump is serviced and maintained by suitably qualified personnel at regular intervals.

The service life of the pump stands and falls with regular maintenance. Other factors are to be found in the operating conditions to which the pump is exposed. In unfavourable conditions, it may be necessary to significantly reduce the maintenance intervals and the time of inspection.

The maintenance intervals are shown in the following overview:

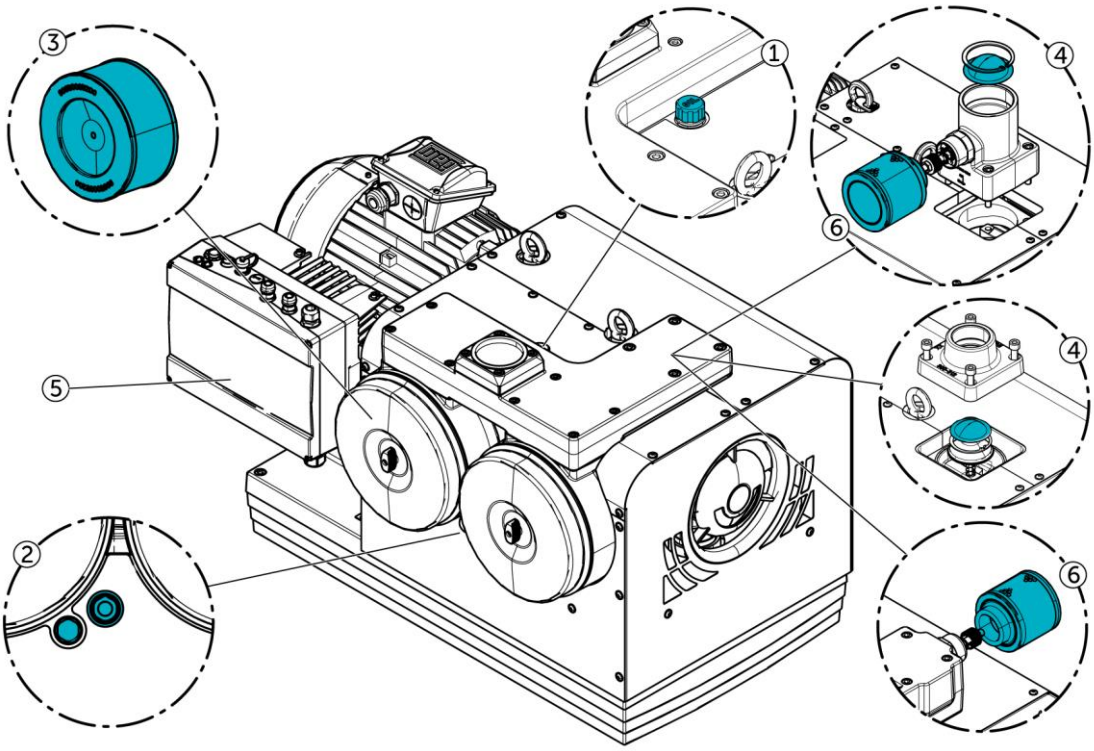

BCV 100, BCV 150, BCV 300, BCV 400, BCV 500

Component	40 - 200 h	20000 h (min. 1x/3a)	min. 1x/1a	min. 4x/1a
Oil (1+2)		change		Visual inspection (level & quality)
Intake filter (3)	check, clean		change	
Suction strainer (4)				check, clean
Frequency inverter (5)	Clean (vacuum)			
Intake filter (6)			check, clean	
Inspection		Inspection by the Gebr. Becker service - arrange an appointment		
Housing	clean			
Protective devices	Visual inspection			

Table: Maintenance intervals

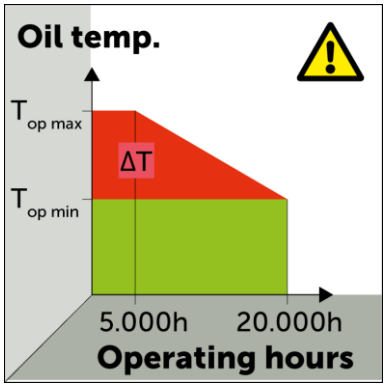

ATTENTION

The oil change interval of 20,000 operating hours only applies when using Becker-approved oils and under optimum operating conditions.

Depending on the actual operating conditions, the oil change interval must be adjusted accordingly. With high or extreme loads (max. vacuum very frequently), the oil change interval can be reduced to up to 5,000 operating hours.

The use of non-approved oils leads to shortened oil change intervals.

The oil quality must be checked regularly.

We are happy to support our customers with this work and in assessing the condition of the device with the help of our Gebr. Becker service. We always recommend an on-site consultation for large pumps.

8.2 PREPARATION

The responsibilities for installation, operation, maintenance and cleaning must be clearly regulated and defined.

For maintenance and servicing measures, it must be ensured that sufficient space is available for all work. The maintenance area must be secured.

The following steps must be observed when preparing for servicing and maintenance work:

1. All existing electrical equipment must be individually disconnected. Maintenance during operation or when the pump is switched on is strictly prohibited.
2. If safety devices have to be dismantled or modified, they must be refitted, adjusted and tested immediately after completion of the maintenance and servicing work and before the pump is started.
3. After this, a qualified electrician may carry out work on the pump, taking into account the 5 safety rules.

Once the work has been completed, the pump may be put back into operation after a visual inspection.

8.3 MAINTENANCE ACTIVITIES

DANGER

Danger to life due to defective, dismantled and manipulated protective devices

WARNING

Danger from hot components and equipment

CAUTION

Contamination and damage to the environment due to operating materials

HINT

For a detailed description of the safety instructions, see chapter 2 "Basic safety instructions".

HINT

Wear suitable PPE

The safety instructions must always be observed:

- Use suitable tools and handle with care.
- Personal protective equipment must be used to prevent injuries caused by tools or components.
- The maintenance area must be kept clean and tidy. Objects lying around can pose a tripping hazard.
- If anything is unclear, the responsible body or the manufacturer should be consulted.

The maintenance plan provides for the following activities:

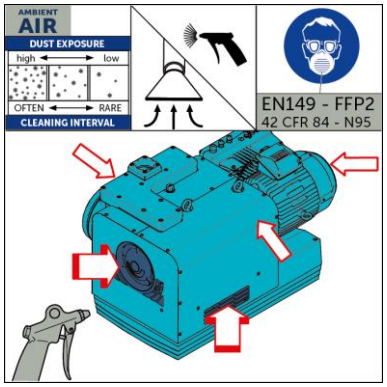

Vacuum / clean surface with compressed air

The pump must be cleaned regularly. The interval depends on the degree of soiling on the housing.

Protective goggles and an FFP2 mask in accordance with EN 149 must be worn during cleaning.

Cleaning the frequency inverter

With the VARIAIR variant, the frequency inverter must also be cleaned.

Do not use compressed air to remove dirt from the fan openings, but use a vacuum cleaner.

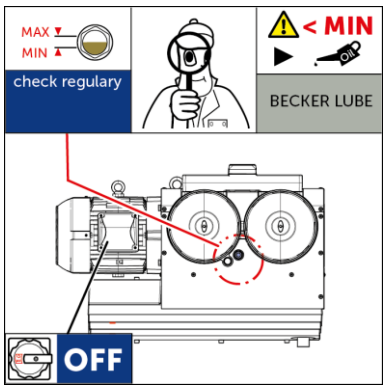

Check oil level

The oil level must be checked through the oil sight glass. The oil level can only be displayed realistically when the vehicle is at a standstill after an appropriate waiting time.

Discolouration and changes in consistency indicate deteriorating quality. In this case, the oil should be changed promptly.

HINT

For information on oil types and filling quantities, see chapter 9.3

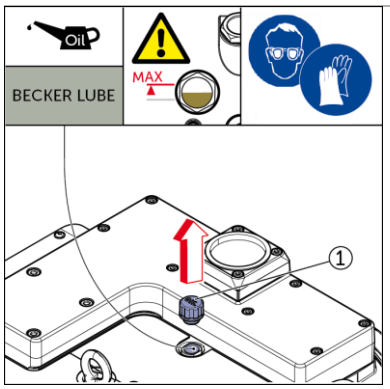

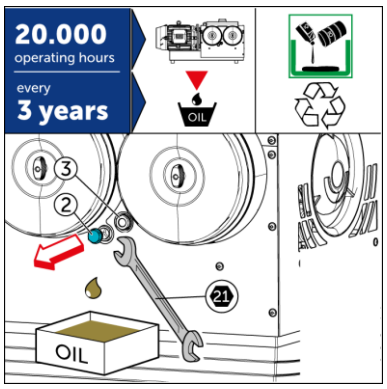

Oil change

In its function as gear oil, the oil lubricates and cools the mechanical drive area of the compressor unit. The oil does not come into contact with the compression chamber or the process gas inside.

1. Ensure that all preparations required in chapter 8.2 have been made. Do not change the oil until the vacuum pump has cooled down.
2. Place a container underneath to collect the used oil
3. Open the oil filler cap (1) for venting
4. Open the oil drain plug (2), hold the drain pipe with a suitable spanner and drain the used oil into a container
5. Close the oil drain plug (tightening torque of the screw 15Nm ±2Nm)
6. Fill new oil into the top of the pump
7. The oil level must not exceed the max. fill level (marking on the oil sight glass (3))
8. Close the oil filler cap
9. Properly dispose of used oil in accordance with national regulations for the disposal of hazardous materials.

HINT

For information on intervals, see chapter 8.1

HINT

For information on oil types and filling quantities, see chapter 9.3

8.3.1 BCV 100-500 (WITH INTEGRATED FILTRATION)

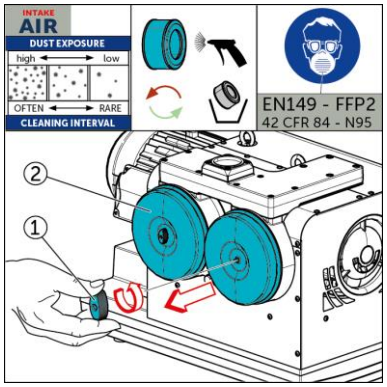

Clean the intake filter

The filter cartridge (BCV 300/400/500 with 2 filter cartridges) becomes clogged depending on the degree of contamination of the air drawn in. It must be cleaned at the aforementioned intervals, but at least every 200 hours.

Protective goggles and an FFP2 mask in accordance with EN 149 must be worn during cleaning.

The filter cartridge is installed behind the filter cover (2), which is fastened with a locking element (1). Loosen this, remove the filter cover and take out the filter cartridge.

Proceed as follows to clean the filter cartridge, depending on how it is installed:

1st paper filter cartridge

- blow through with compressed air from the inside to the outside. Ensure that there is sufficient clearance, as an excessively hard air flow can damage the filter material.

2. polyester filter cartridge

- First remove coarse dirt from the filter by lightly tapping it out.
- Carefully rinse the filter from the inside out with a not too hard jet of water. For stubborn dirt, we recommend soaking the filter in a mild soap-based cleaning bath.
- Shake the excess water out of the filter and allow it to dry out completely in the air.
- When drying with compressed air, ensure a sufficient distance is maintained, as an excessively hard air flow can damage the filter material.
- Caution: Always allow polyester filters to dry after cleaning with water. - Risk of sticking or mould!

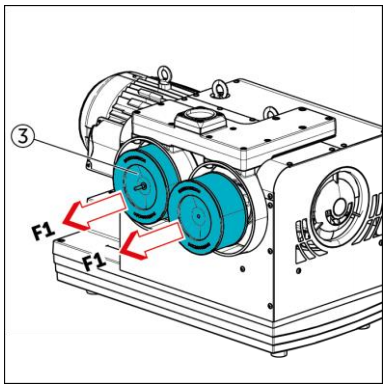

If the function of the filter is restricted even after the cleaning process (clogged, oily, greasy or damaged), it must be replaced.

They should be replaced after one year at the latest.

Only original spare parts from Gebr. Becker may be used.

Size	Quantity	Material	Order number
BCV 100/150	1	Paper	90950065200
BCV 100/150	1	Polyester	90950165200
BCV 300	2	Paper	90950065200
BCV 300	2	Polyester	90950165200

Table: Intake filter - order numbers

8.3.2 BCV 100-500 (FOR EXTERNAL FILTERING)

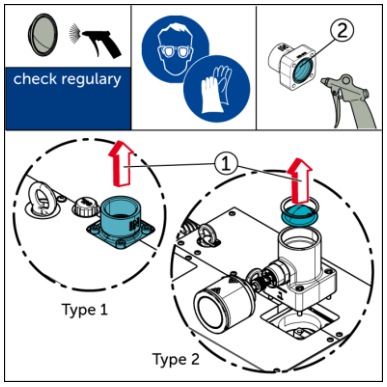

Clean the suction strainer

A suction strainer is installed in the connection flange to prevent larger foreign bodies from entering the inside of the pump.

The strainer must be checked for soiling and cleaned at the specified interval (see table).

1. Ensure that all requirements for maintenance operation have been met.
2. Loosen the 4 screws on the connecting flange and remove the flange (1)
3. Clean the flange with suction strainer from the inside to the outside with compressed air (2)
4. Check for damage to the flat gasket under the flange and replace if necessary.
5. Refit the intake flange (tightening torque of the screws 54 Nm ±3.5 Nm).

ATTENTION

With this version of the series (without internal filtration), additional external filtration must be provided upstream of the pump for the intake air. Otherwise, dirt and condensate can cause damage to the pump.

8.3.3 BCV 400-500 (FILTERING AT THE SAFETY VALVE)

In the large sizes (BCV 400/500 - not FD version), there is a safety valve on the suction flange that opens when the maximum vacuum is reached and sucks ambient air into the pump.

An additional filter, which is attached to the valve, prevents damage to the pump caused by dirt and condensate.

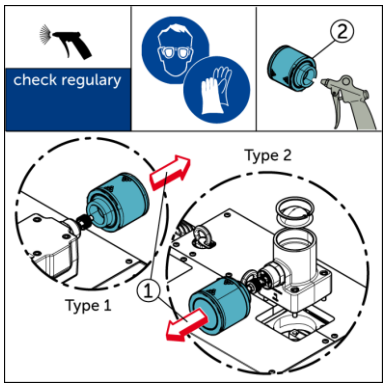

Proceed as follows to clean the filter cartridge:

Remove the paper filter cartridge and blow through from the inside to the outside using compressed air. Make sure there is sufficient clearance, as an excessively hard air flow can damage the filter material.

If the function of the filter is restricted even after the cleaning process (clogged, oily, greasy or damaged), it must be replaced.

Only original spare parts from Gebr. Becker may be used.

Size	Quantity	Material	Order number
BCV 400/500	1	Paper	74000501000

Table: Intake filter - Order numbers

8.4 MEDIA LINES

WARNING

Risk of injury due to stored residual energy

Lines, hoses, pipes, valves and connections must be checked for damage (leaks) at regular intervals.

The following instructions must be observed when carrying out maintenance and repair work on media lines:

- Before starting work on the media lines, the system must be depressurised and secured against being switched on again. Residual energy must be dissipated or discharged.
- Residual liquids in media lines must be drained off.

8.5 CONDITIONS FOR SWITCHING ON AGAIN

The following points must be observed before restarting after maintenance and servicing work:

- Unauthorised persons must be removed from the pump.
- The proper connection between the pump and the media lines must be checked.
- The media lines must be checked for leaks and damage.
- The power supply must be checked for damage and proper functioning.
- All protective devices must be present, functional and tested.

8.6 SPARE AND WEAR PARTS

WARNING
Safety risk due to spare parts not approved by the manufacturer

A comprehensive spare parts list with all spare and wear parts for the series listed here can be found on our homepage under the following link:

www.becker-international-shop.com

8.7 TEMPORARY SHUTDOWN

The following steps must be observed during a temporary shutdown:

1. Shutdown
2. To switch off the pump, it must be shut down and secured against being switched on again. In addition, a warning sign must be attached to the mains disconnection device.
3. All existing electrical equipment must be individually disconnected.
4. Disconnection from the power supply
5. A qualified electrician switches the motor off and disconnects it. After carrying out the 5 safety rules, non-qualified electricians may also carry out work on the pump.
6. After completion of the decommissioning, the activities under "Recommissioning" must be followed.

8.8 CLEANING

DANGER
Danger to life due to defective, dismantled and manipulated protective devices

DANGER
Danger to life due to unexpected start-up

WARNING
Danger from hot components and equipment

WARNING
Risk of injury due to slipping, tripping

CAUTION
Contamination and damage to the environment due to operating materials

HINT
For a detailed description of the safety instructions, see chapter 2 "Basic safety instructions".

HINT
Wear suitable PPE

The entire pump must be cleaned at regular intervals depending on the amount of dust. This includes cleaning all surfaces of the pump with a compressed air gun and a moistened cleaning cloth.

The cleaning instructions of the manufacturers of components and assemblies must be observed.

The use of solvents or cleaning agents containing solvents is prohibited.

The use of cleaning agents that are highly flammable or generally flammable is prohibited!

The statutory environmental protection regulations must be observed during cleaning.

The pump may only be switched on again if there is no damage to the pump and no person is exposed to danger.

ATTENTION

Incorrect cleaning, for example by using the wrong cleaning agents or cleaning equipment (e.g. high-pressure cleaner), can cause damage to the pump.

8.9 DISMANTLING AND DECOMMISSIONING

DANGER

Danger to life due to electric shock - Personnel qualification

DANGER

Danger to life due to unexpected start-up

WARNING

Danger from hot components and equipment

WARNING

Risk of injury due to slipping, tripping

CAUTION

Contamination and damage to the environment due to operating materials

HINT

For a detailed description of the safety instructions, see chapter 2 "Basic safety instructions".

HINT

Wear suitable PPE

The following steps must be observed during dismantling and decommissioning:

1. Switch off the pump and enable the drive.
2. Switch off the power supply and secure it against unintentional restarting.
3. Disconnect the supply line of the drive.
4. Shut off media lines and discharge pressure differences if necessary.
5. Disconnect the media lines from the pump.
6. Clean the pump thoroughly and remove operating fluids
7. Dismantle the pump in reverse order of assembly or according to the separate dismantling instructions. Loose parts must be secured to prevent them from tipping over or falling.
8. Protect the pump from further contamination
9. Dispose of operating materials in accordance with the applicable local regulations.

8.10 STORAGE

The following requirements for the storage location must be observed in order to store the unused pump in a proper condition over a longer period of time. If the following requirements are not observed, damage to the pump may occur.

The storage location must

- Dry and clean
- just be
- be protected from sudden changes in temperature and humidity
- be protected from salt spray, industrial gases, corrosive liquids, rodents and fungal attack

Restocking

If the pump is to be stored for a longer period of time (more than two months) after use, the following steps must be observed.

1. Ensure that the pump is free of water or water vapour.
2. To do this, close the intake.
3. Allow the pump to run for 30 minutes after reaching operating temperature. Only draw in a small amount of dry ambient air.
4. Immediately after switching off the pump, seal all inlets and outlets with sealing plugs.
5. Silica gel packets must be placed inside the filter housing. Attach a warning sticker so that the packets can be removed again before commissioning.

ATTENTION

If the pump was pumping air with a high moisture content before the shutdown period, the above steps are also recommended for shorter storage periods

8.11 WASTE DISPOSAL

CAUTION

Contamination and damage to the environment due to operating materials

HINT

For a detailed description of the safety instructions, see chapter 2 "Basic safety instructions".

The pump is disposed of in a disassembled state. See chapter 8.9.

When disposing of the pump, the relevant local environmental protection regulations must be observed

9 PRODUCT DATA SHEET

9.1 PRODUCT OVERVIEW

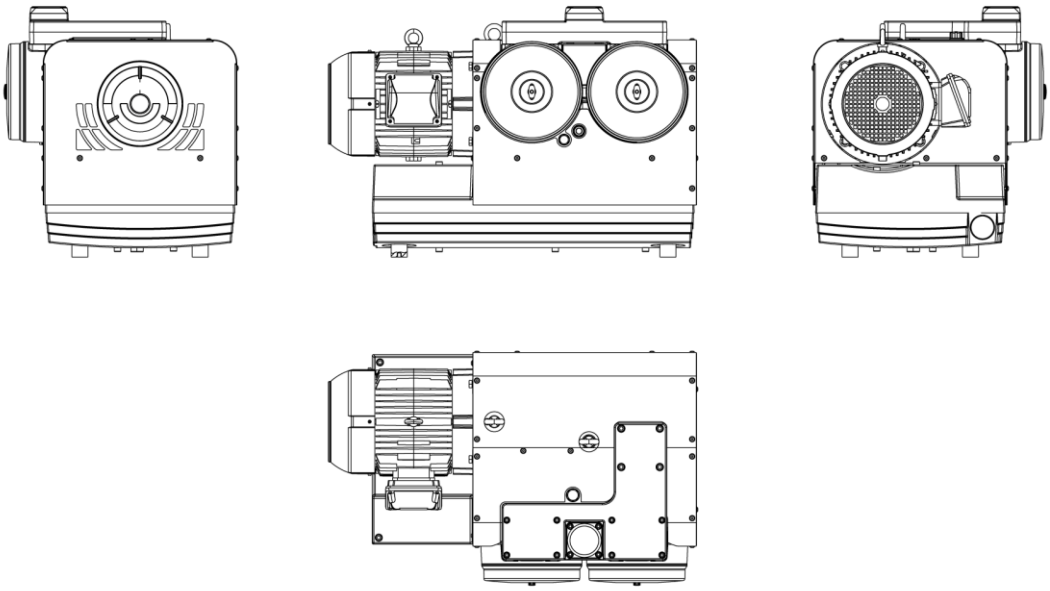

9.2 OPERATING PARAMETERS

9.2.1 BCV 100-500

Variant	BCV 100	BCV 150	BCV 300	BCV 400
Volume flow 1 max.	100 m^3/h (50 Hz)	150 m^3/h (50 Hz)	275 m^3/h (50 Hz)	400 m^3/h (50 Hz)
Volume flow 2 max.	120 m^3/h (60 Hz)	180 m^3/h (60 Hz)	325 m^3/h (60 Hz)	470 m^3/h (60 Hz)
Vacuum	50 mbar (abs)	100 mbar (abs)	150 mbar (abs)	200 mbar (abs)
Weight	121 - 133 kg	190 - 201 kg	323 - 331 kg	388 - 418 kg
Sound pressure level 1 max.	67 dB(A) (50 Hz)	67 dB(A) (50 Hz)	69 dB(A) (50 Hz)	71 dB(A) (50 Hz)
Sound pressure level 2 max.	71 dB(A) (60 Hz)	71 dB(A) (60 Hz)	70 dB(A) (60 Hz)	74 dB(A) (60 Hz)
Permissible ambient temperature	0 - 40 °C	0 - 40 °C	0 - 40 °C	0 - 40 °C
Exhaust air temperature max.	43 °C	61 °C	68 °C	110 °C
Maximum installation height	800 m a.s.l.	800 m a.s.l.	800 m a.s.l.	800 m a.s.l.
Maximum humidity of the intake air	90 %	90 %	90 %	90 %

* Reference data (atmosphere): 1000 mbar (100 kPa), 20 °C

Table: Operating parameters

Variant	BCV 500
Volume flow 1 max.	500 m^3/h (50 Hz)
Volume flow 2 max.	600 m^3/h (60 Hz)
Vacuum	200 mbar (abs)
Weight	391 - 421 kg
Sound pressure level 1 max.	74 dB(A) (50 Hz)
Sound pressure level 2 max.	79 dB(A) (60 Hz)
Permissible ambient temperature	0 - 40 °C
Exhaust air temperature max.	125 °C
Maximum installation height	800 m a.s.l.
Maximum humidity of the intake air	90 %

* Reference data (atmosphere): 1000 mbar (100 kPa), 20 °C

Table: Operating parameters

9.2.2 BCV 400-500 FD

Variant	BCV 400 FD	BCV 500 FD
Volume flow 1 max.	400 m^3/h (50 Hz)	500 m^3/h (50 Hz)
Volume flow 2 max.	470 m^3/h (60 Hz)	600 m^3/h (60 Hz)
Vacuum	200 mbar (abs)	200 mbar (abs)
Weight	339 - 346 kg	356 - 395 kg
Sound pressure level 1 max.	73 dB(A) (50 Hz)	74 dB(A) (50 Hz)
Sound pressure level 2 max.	75 dB(A) (60 Hz)	77 dB(A) (60 Hz)
Permissible ambient temperature	0 - 40 °C	0 - 40 °C
Exhaust air temperature max.	150 °C	150 °C
Maximum installation height	800 m a.s.l.	800 m a.s.l.
Maximum humidity of the intake air	90 %	90 %

* Reference data (atmosphere): 1000 mbar (100 kPa), 20 °C

Table: Operating parameters

9.2.3 VAU BCV 100-500

Variant	VARIAIR BCV 100	VARIAIR BCV 150	VARIAIR BCV 300
Volume flow 1 max.	50 m^3/h (30 Hz)	74 m^3/h (30 Hz)	147 m^3/h (30 Hz)
Volume flow 2 max.	120 m^3/h (60 Hz)	180 m^3/h (60 Hz)	325 m^3/h (60 Hz)
Vacuum	50 mbar	100 mbar	150 mbar
Weight	178 kg	208 kg	340 kg
Sound pressure level max.	70 dB(A) (40 Hz)	71 dB(A) (40 Hz)	74 dB(A) (40 Hz)
Permissible ambient temperature	0 - 40 °C	0 - 40 °C	0 - 40 °C
Exhaust air temperature max.	45 °C	65 °C	87 °C
Maximum installation height	800 m a.s.l.	800 m a.s.l.	800 m a.s.l.
Maximum humidity of the intake air	90 %	90 %	90 %
* Reference data (atmosphere): 1000 mbar (100 kPa), 20 °C			

Table: Operating parameters

9.3 OPERATING RESOURCES

Operating resources	Container size	Order number
Gear oil		
Becker Lube G 150	1 litre 5 litres	96003600101 96003600201

Table: Operating resources

Pump	Oil filling quantities
Size	
BCV 100	0.75 litre
BCV 150	0.75 litre
BCV 200	1.0 litre
BCV 250	1.0 litre
BCV 300	1.0 litre
BCV 400	1.0 litre
BCV 500	1.0 litre

Table: Oil filling quantities

9.4 TECHNICAL DATA

Technical data sheets for the pumps and safety data sheets for the oils can be found on our homepage under the following link:

www.becker-international.com/download

MAKE IT BECKER.

28100001400 | 2026-05-28 | All rights reserved