DATA SHEET

VT 4.25

ROTARY VANE VACUUM PUMPS

oil-free
air-cooled

MAKE IT BECKER.

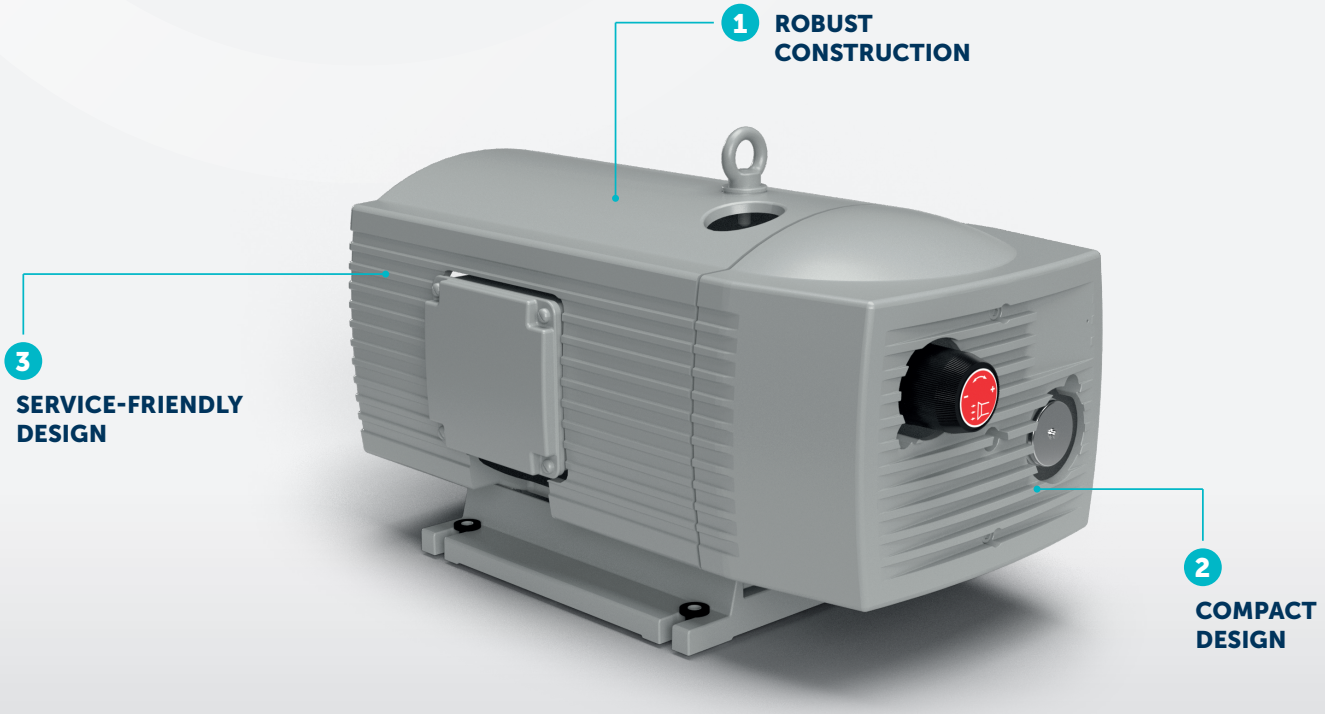

1. Thanks to high-quality construction, VT vacuum pumps are both durable and reliable, suitable for demanding conditions.
2. The direct use of the motor shaft as a rotor shaft results in a particularly compact design, saving space and resulting in simpler machine integration.
3. A service-friendly design allows for easy on-site maintenance, reducing unplanned downtime.

BECKER

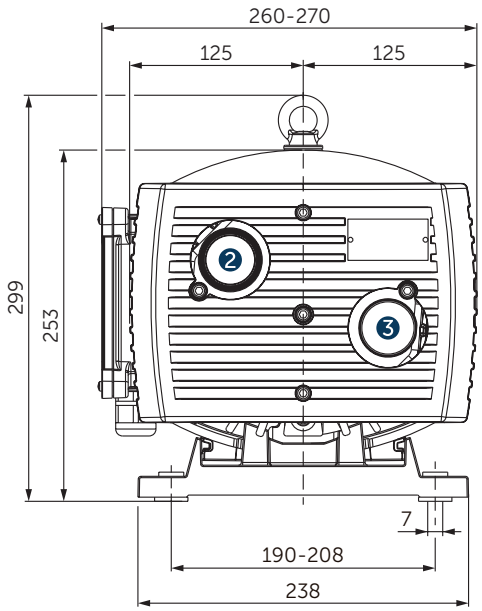

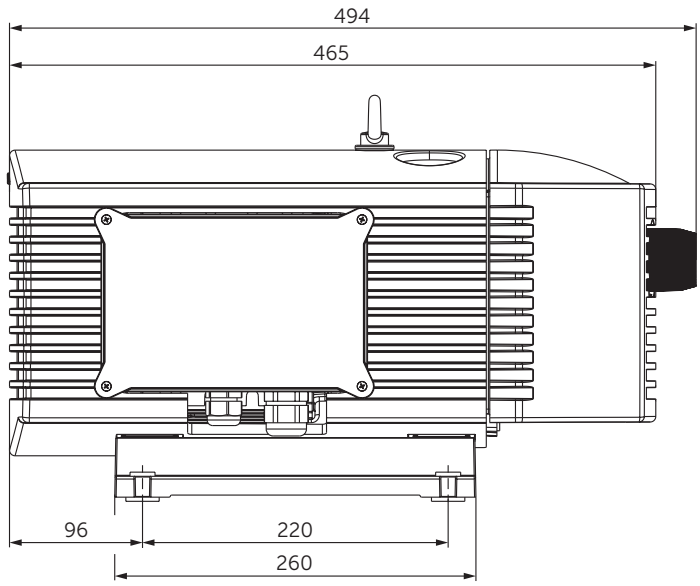

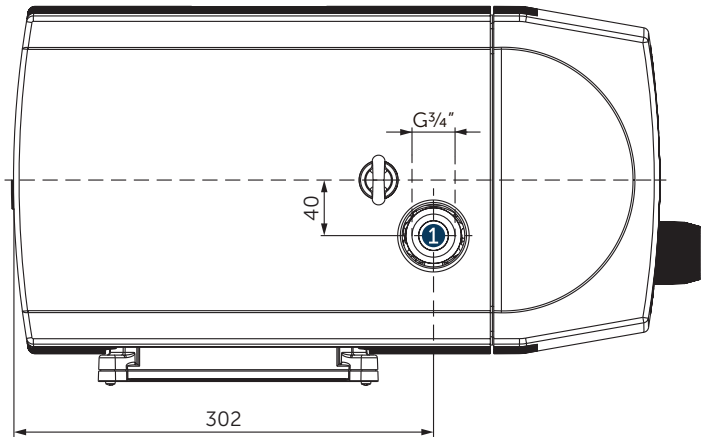

1 Vacuum connection (G¾")
2 Vacuum regulating valve
3 Blow-off valve
- Including integrated suction air filter
- The illustration of the terminal box may vary.
- Dimensions in mm

Suction air rate		Vacuum absolute		Installed motor power		Emission sound pressure level [1]		Weight with motor [2]
m^3/h		mbar		kW		dB(A)		kg
50 Hz	60 Hz	50 Hz	60 Hz	50 Hz	60 Hz	50 Hz	60 Hz	
25	30	150	150	0.75–0.8	0.9–1.0	62	67	≈26–29

[1] According to DIN EN ISO 3744 (KpA = 3 dB(A)), 1 m distance, at medium load, both connection sides piped
[2] Depending on the motor
- Motor data can be found in the separate specification sheet. – Download see back cover. The overall device length is not affected.
- Reference data (atmosphere): 1000 mbar, 20°C; Tolerance: ±5%

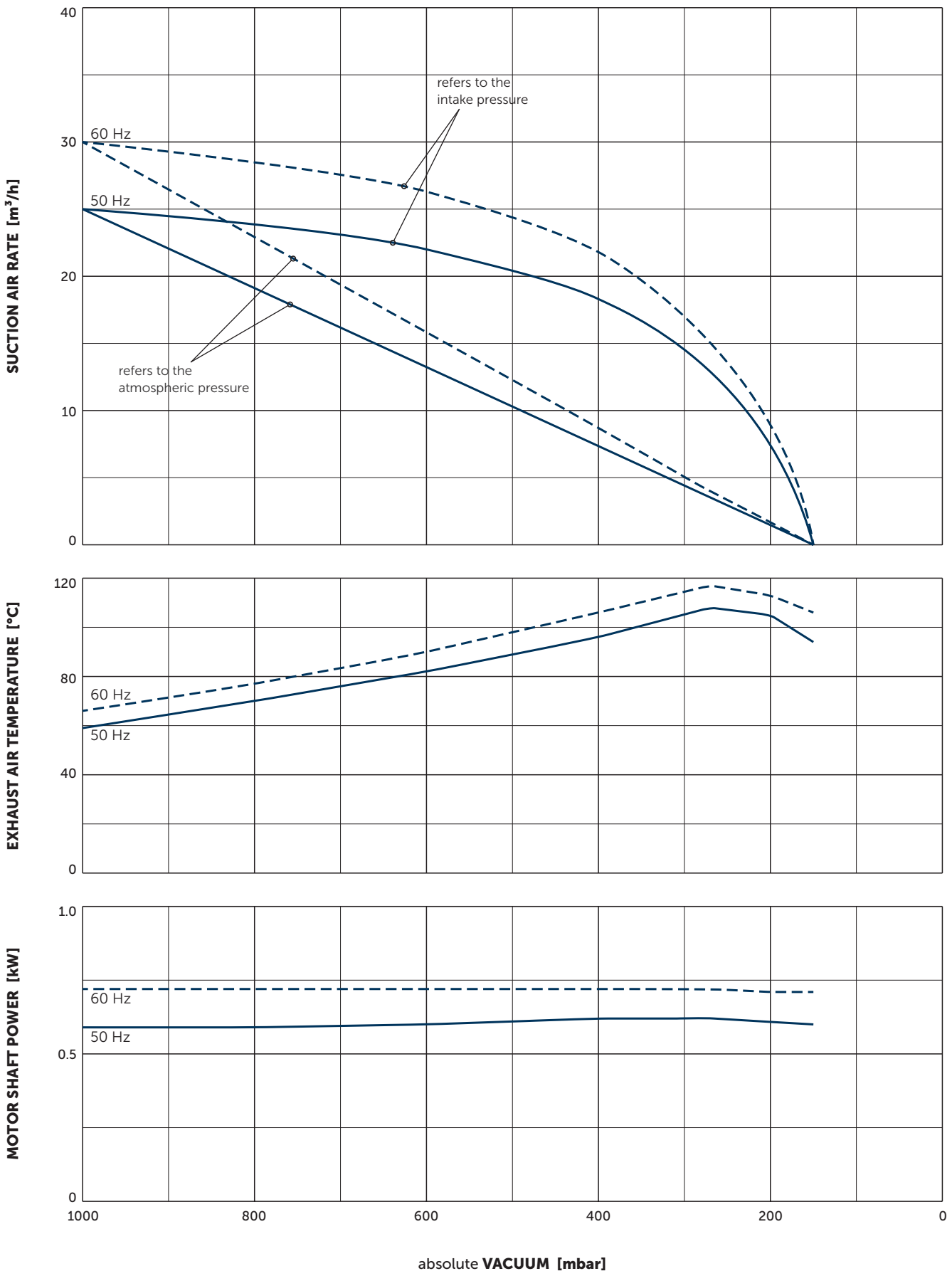

Reference data (atmosphere): 1000 mbar, 20°C
Tolerance: ±5%

VARIANTS AND ACCESSORIES

VX 4.25

SERIES X: BECKER INNOVATION WITH TOP WARRANTY

Equipped with specially developed vanes, these oil-free rotary vane pumps distinguish themselves by high abrasion resistance, and with that extremely long service lives. Due to the low wear there is also minimal dust, so the series X pumps are perfectly suited for precision processes under clean room conditions.

This innovation branded by Becker is outstanding not only because of its 100 percent oil-free operation, excellent degree of efficiency and low power consumption.

In the area of sensitive vacuum, series X also guarantees precise low-pulsation air conduction.

Becker guarantees for these pumps a vane life-time of 20,000 operating hours or a maximum of 3 years. The enhanced longevity of X series pumps also extends service life intervals, and can cut out the need for frequent service visits with costly pump failures now no longer an issue.

ADVANTAGES

- Quick, clean and quiet
- Oil-free
- Wear resistant
- Energy saving
- Long-life reliability
- Ultimate pressure 100 mbar absolute

OTHER VARIANTS AND ACCESSORIES

- With external suction filter [1)]
- Sound proof box SH 19 [1)]

Example for an external suction filter

Sound proof box SH 19

[1)] See separate data sheet
- Possible combinations on request

Right of modification reserved 2025-10-15

MAKE IT BECKER.

MOTOR
SPECIFICATIONS

www.becker-international.com
www.becker-international-shop.com

BECKER